NO.	DATE	REVISION

STATE	PROJECT DESIGNATION	YEAR	SHEET NO.	TOTAL SHEETS
ALASKA	PENDING/NFHWY00476	2020	A1	72
CDS ROUTE: 170000	MILEPOINT: 278.852 TO 278.509			

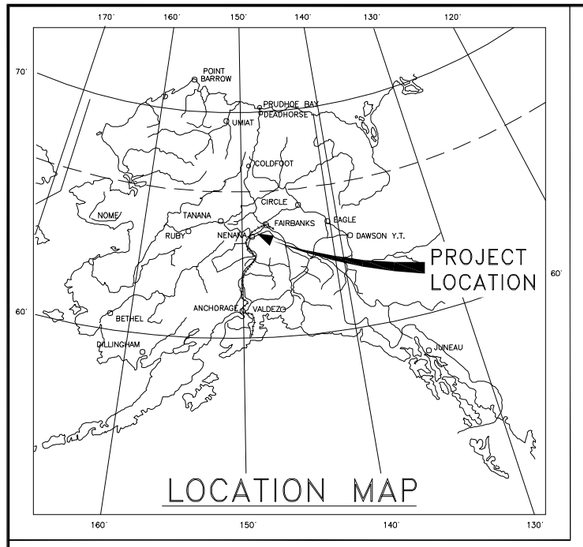

STATE OF ALASKA
DEPARTMENT OF TRANSPORTATION
&
PUBLIC FACILITIES

PROPOSED HIGHWAY PROJECT

PARKS HIGHWAY MP 315
LITTLE GOLDSTREAM BRIDGE #678
PENDING/NFHWY00476

GRADING, DRAINAGE, PAVING, BRIDGE

INDEX OF SHEETS

SHEET NO.	DESCRIPTION
A1	TITLE SHEET
A2	LEGEND
A3	PROJECT CONTROL
B1	TYPICAL SECTIONS
C1	ESTIMATE OF QUANTITIES
D1	SUMMARIES
E1–E2	DETAILS
F1–F4	PLAN & PROFILE
G1–G2	GRADING
H1–H2	SIGNING SUMMARY
N1–N21	BRIDGE PLANS
Q1–Q2	EROSION & SEDIMENT CONTROL PLAN
T1–T3	TRAFFIC CONTROL PLAN
V1–V32	STANDARD PLANS

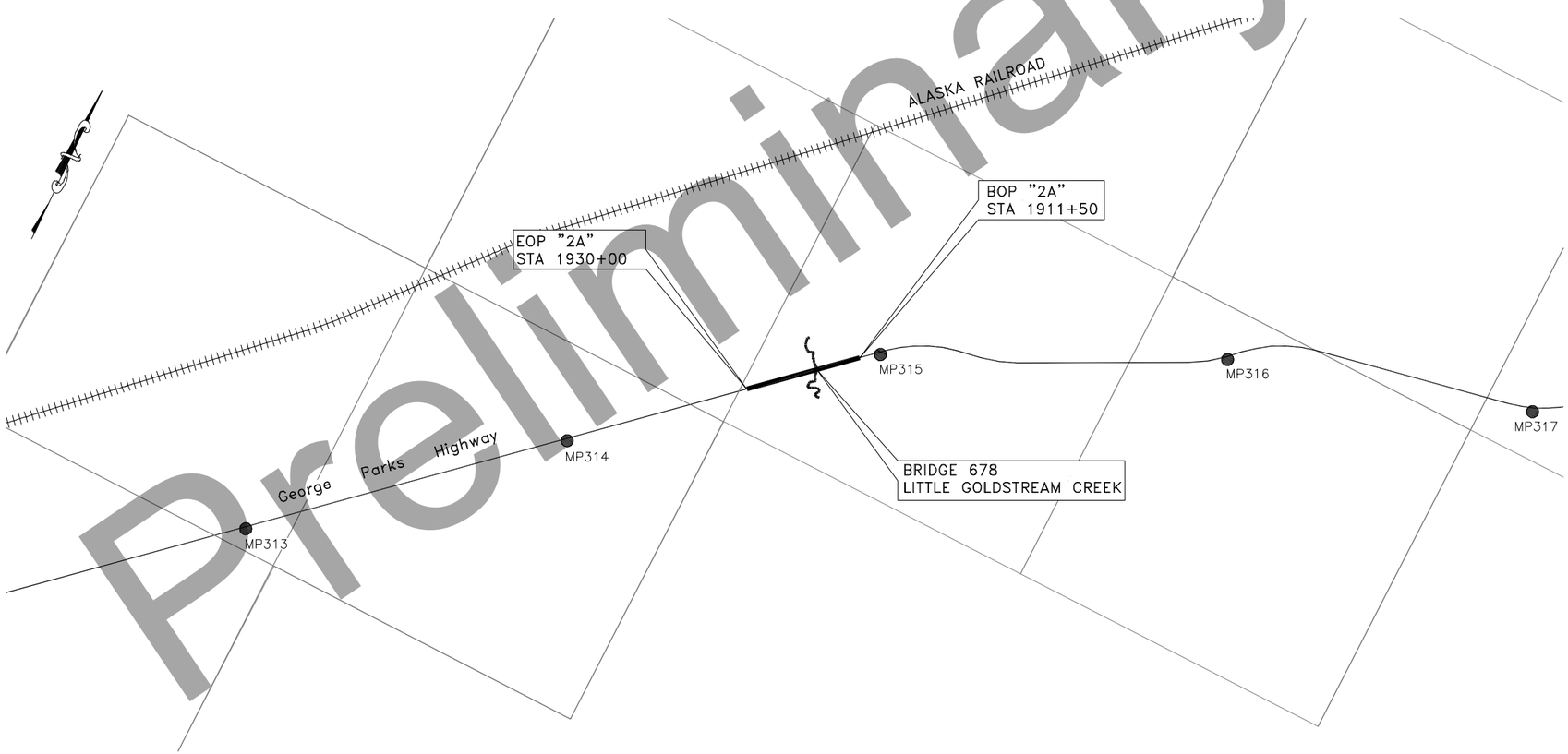

DESIGN DESIGNATIONS

ADT (2016)	1800
ADT (2040)	2430
DHV (%)	14.5%
PERCENT TRUCKS (T)	17%
DIRECTIONAL SPLIT (D)	35/65
DESIGN SPEED (V)	70 MPH
DESIGN ESAL'S (15 YEARS)	1,530,697

PROJECT SUMMARY

WIDTH OF PAVEMENT	40 FT
LENGTH OF GRADING	1726 FT
LENGTH OF PAVING	1850 FT
LENGTH OF PROJECT	1850 FT

JENNIFER WRIGHT, P.E., PROJECT MANAGER

STATE OF ALASKA
DEPARTMENT OF TRANSPORTATION
&
PUBLIC FACILITIES

APPROVED BY:

_____ DATE _____

Sarah E. Schacher, P.E.
Preconstruction Engineer, Northern Region

ACCEPTED FOR CONSTRUCTION:

_____ DATE _____

Ryan F. Anderson, P.E.
Regional Director, Northern Region

Preliminary Plans

T:\AKDOT\148830 – DOT&PF Parks 305–325 PI\04 CADD\LGS PS&E\60657_Cover_LGS–Cover Thu, Jul/23/20 11:47am

NO.	DATE	REVISION	STATE	PROJECT DESIGNATION	YEAR	SHEET NO.	TOTAL SHEETS
			ALASKA	PENDING/NFHWY00476	2020	A2	A3

	RECOVERED	SET
USC&GS MONUMENT		
PRIMARY MONUMENT		
CENTERLINE MONUMENT IN CASING		
PRIMARY R.O.W. MONUMENT		
BENCHMARK		BM
REBAR AND CAP		

CONSTRUCTION CENTERLINE	5+00
MISCELLANEOUS CENTERLINE	10+00
STATION EQUATION	"L"48+97.23 POT BK= "O"48+97.23 PC AHD
PROJECT RIGHT-OF-WAY LINE	R/W
EXISTING RIGHT-OF-WAY LINE	
EXISTING PROPERTY LINE	
TEMPORARY EASEMENT LINE (TCP OR TCE)	TCP
ACCESS OR SECTION LINE EASEMENT	ACCESS EASEMENT
PROPOSED CUT SLOPE LIMIT	
PROPOSED FILL SLOPE LIMIT	
SECTION LINE	
1/4 SECTION LINE	
1/16 SECTION LINE	
TOWNSHIP & RANGE LINE	T. 2 N. / T. 1 N. — T. 1 E. / T. 2 E.

	EXISTING	PROPOSED
ELECTRIC LINE (OVERHEAD)		
POWER POLE LINE		
JOINT USE POWER & TELEPHONE		
TELEPHONE POLE LINE		
POLE ANCHOR		
ROADWAY/PAVEMENT EDGE		
FENCE		
GUARDRAIL		
CULVERT PIPE		
SIGN		
MAILBOX	MB	MB
TREE LINE		
WATER BOUNDARY		
ORDINARY HIGH WATER LINE		
FLOW CENTERLINE		
FLOW DIRECTION		
WETLANDS		
EXISTING BUILDINGS	H	H = HOUSE G = GARAGE M = MERCHANT/STORE B = BARN S = SHED P = PRIVY SS = SERVICE STATION W = WAREHOUSE
TEST HOLE	TH	
CONIFER TREE		
DECIDUOUS TREE		

ABBREVIATIONS

Δ	CENTRAL ANGLE OF CURVE
ACS	ALASKA COMMUNICATIONS SYSTEMS
ADT	AVERAGE DAILY TRAFFIC
BFS	BEGIN FULL SUPER
BM	BENCHMARK
BMP	BEST MANAGEMENT PRACTICES
BNC	BEGIN NORMAL CROWN
BNS	BEGIN NORMAL SHOULDER
BOP	BEGINNING OF PROJECT
BP	BEGIN POINT
℄, CL	CENTERLINE
COM	COMMERCIAL
CMP	CORRUGATED METAL PIPE
CP	CONTROL POINT
CSP	CORRUGATED STEEL PIPE
CY	CUBIC YARDS
D	DEGREE OF CURVATURE
DEMO	DEMOLITION
DHV	DESIGN HOURLY VOLUME
DNR	DEPARTMENT OF NATURAL RESOURCES
DOR	DESIGNER OF RECORD
DRWY	DRIVEWAY
E	EASTING
EFS	END FULL SUPER
EG	EXISTING GROUND
ELEV, EL	ELEVATION
ENC	END NORMAL CROWN
EOA	END OF ALIGNMENT
EOP	END OF PROJECT
EP	END POINT
EQU	EQUATION
ESAL	EQUIVALENT SINGLE AXLE LOAD
ESCP	EROSION AND SEDIMENT CONTROL PLAN
EX	EXISTING
FG	FINISHED GRADE
FT	FEET
GALV	GALVANIZED
HT	HEIGHT
HWY	HIGHWAY
IN	INCHES
L	LENGTH OF CURVE
LBS	POUNDS
LC	LEVEL CROWN
LDP	LOW DISTORTION PROJECTION
LF	LINEAR FOOT
LP	LOW POINT
LS	LUMP SUM
LT	LEFT
LVC	LENGTH VERTICAL CURVE
MAX	MAXIMUM
MB	MAILBOX
MIN	MINIMUM
MSF	THOUSAND SQUARE FEET
N	NORTHING
NTS	NOT TO SCALE
PC	POINT OF CURVATURE
P.C.C.	POINT OF CURVATURE ON CURVE
P.E.	PROFESSIONAL ENGINEER
PI	POINT OF INTERSECTION
POC	POINT ON CURVE
POT	POINT ON TANGENT
PT	POINT OF TANGENCY
R	RADIUS OF CURVE
RC	REVERSE CROWN
RD	ROAD
ROW, R/W	RIGHT OF WAY
RT	RIGHT
S	SUPERELEVATION
SF	SQUARE FEET
STA	STATION
SWPPP	STORM WATER POLLUTION PREVENTION PLAN
SY	SQUARE YARD
T	TANGENT LENGTH
TBM	TEMPORARY BENCHMARK
TCE	TEMPORARY CONSTRUCTION EASEMENT
TCP	TEMPORARY CONSTRUCTION PERMIT
TYP	TYPICAL
UON	UNLESS OTHERWISE NOTED
VPC	VERTICAL POINT OF CURVATURE
VPI	VERTICAL POINT OF INTERSECTION
VPT	VERTICAL POINT OF TANGENCY
W, WTR	WATER

PLAN VIEW KEY

(P) STATION / DIAMETER X LENGTH — *INSTALL CULVERT PIPE*	(A) STATION / TYPE, WIDTH — *CONSTRUCT APPROACH*
(R) STATION / DIAMETER X LENGTH — *REMOVE PIPE*	(#) STATION / SIGN CODE(S) — *SIGN LOCATION #*

LEGEND

Preliminary Plans

PLANS DEVELOPED BY: MICHAEL BAKER INTERNATIONAL, AECC103, 3900 C STREET SUITE 900, ANCHORAGE, AK 99503 (907) 273-1600
T:\AKDOT\148830 - DOT&PF Parks 305-325 P\04 CADD\LGS PS&E\60657_Legends_LGS-LEGEND Thu, Jul/23/20 11:47am

NO.	DATE	REVISION

STATE	PROJECT DESIGNATION	YEAR	SHEET NO.	TOTAL SHEETS
ALASKA	PENDING/NFHWY00476	2020	A3	A3

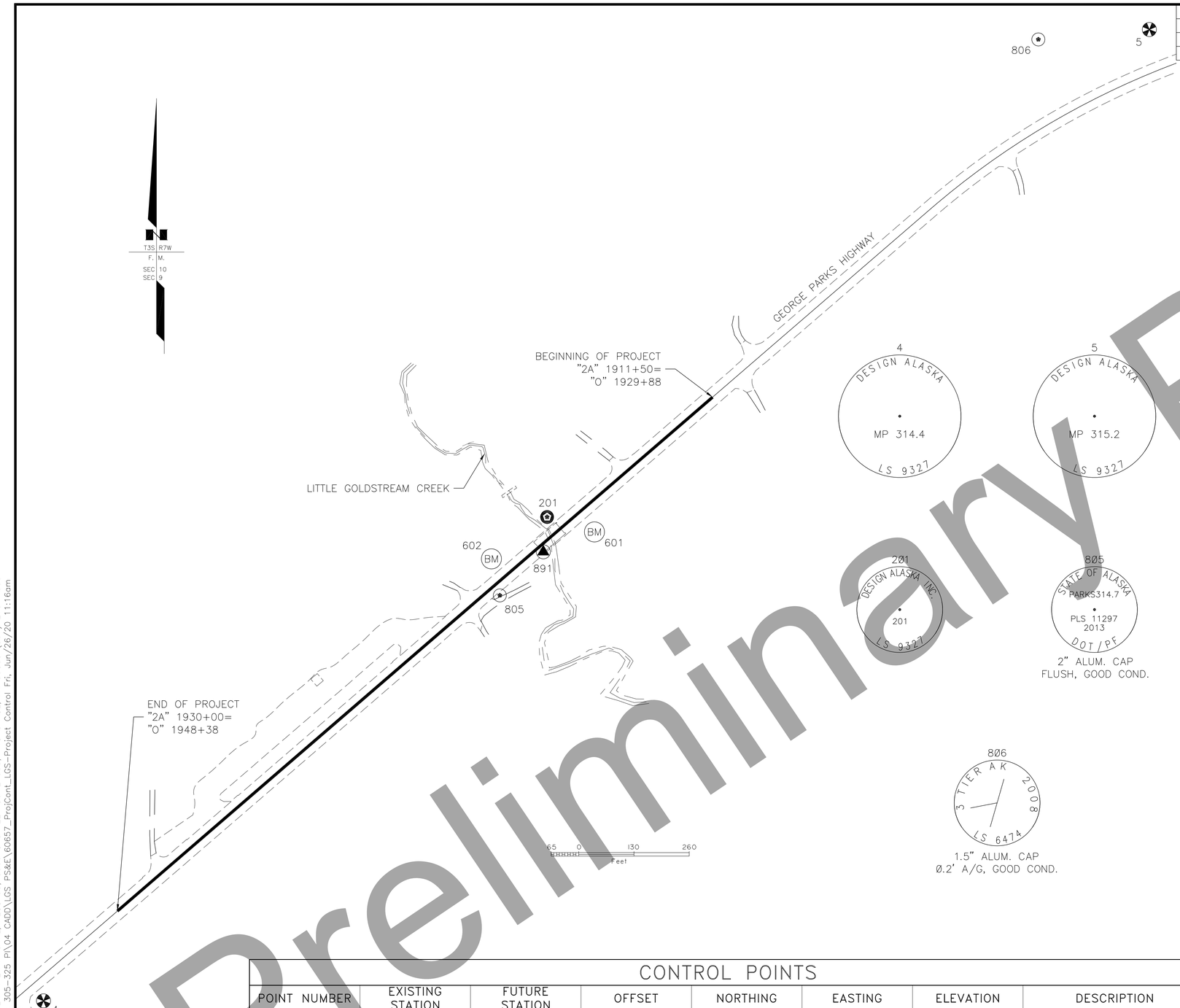

NOTES:

1. THE BASIS OF COORDINATES IS THE NAD83(2011)(EPOCH: 2010.0000) OPUS AVERAGED POSITION OF SURVEY CONTROL MONUMENT #5 "MP 315.2".

   NAD 83 LATITUDE AND LONGITUDE
   LATITUDE 64°40'06.914700" N, LONGITUDE 148°58'08.109993" W

   NAD 83 STATE PLANE ZONE 4 (METERS)
   N: 1188781.772 METERS, E: 550828.624 METERS

   PROJECT (GROUND) COORDINATES (US SURVEY FEET)
   N: 138603.31 FEET, E: 486308.38 FEET

   THE BASIS OF ELEVATIONS IS THE OPUS AVERAGED GEOID 12B (NAVD88) ELEVATION OF 412.16 FEET AT SURVEY CONTROL MONUMENT #5 "MP 315.2".

2. PROJECT IS LOCATED ENTIRELY WITHIN THE FAIRBANKS, ALASKA LOW DISTORTION PROJECTION (LDP), A LOCAL, LOW DISTORTION GRID COORDINATE SYSTEM, EXPRESSED IN US SURVEY FEET, DEVELOPED BY THE ALASKA DEPARTMENT OF TRANSPORTATION & PUBLIC FACILITIES. FAIRBANKS LDP DEFINITION:

   PROJECTION TYPE: LAMBERT CONFORMAL CONIC, 1-PARALLEL
   STANDARD PARALLEL: 64°51'00.0"N (64.85)
   LATITUDE OF GRID ORIGIN: 64°51'00.0"N (64.85)
   CENTRAL MERIDIAN (GRID ORIGIN): 146°56'00.0"W (-146.933333333333)
   FALSE NORTHING: 200000.0 FEET
   FALSE EASTING: 800000.0 FEET
   GRID SCALE FACTOR: 1.00003 (EXACT)
   LINEAR UNIT: SURVEY FEET
   DATUM: NAD 1983-2011
   ELLIPSOID: GRS 1980
   SEMI-MAJOR AXIS (M): 6378137.0
   INVERSE FLATTENING: 298.257222101

3. DISTANCES ARE IN FEET ALONG THE GROUND.

4. THE BASIS OF COORDINATES AND ELEVATIONS WERE DERIVED FROM STATIC GPS OBSERVATIONS CONDUCTED BY DESIGN ALASKA, INC. IN SEPTEMBER OF 2015.

5. THE BASIS OF STATIONING FOR THIS PROJECT IS THE CALCULATED PT AT RECOVERED CONCRETE RIGHT OF WAY MONUMENTS AT STATION "L" 1375+23.83 PT FROM STATE OF ALASKA DEPARTMENT OF HIGHWAYS RIGHT OF WAY MAP NO. F-037-1(13) TITLED "FROM 25 MI. S.W. OF ESTER SOUTHWEST" APPROVED AUGUST 6, 1965.

6. CENTERLINE STATIONING AND ALIGNMENT CALCULATED FROM:

   6.1. TANGENTS DEFINED BY RECOVERED CENTERLINE MONUMENTS BETWEEN STATIONS 1604+95.56 AND 2210+50.74 (F-037-1(13) APPROVED 1965)

   6.1.1. NOTE THAT CENTERLINE MONUMENTS WERE ESTABLISHED ON THE "O" LINE OF F-037-1(13) BETWEEN STATIONS 1912+52.75 AND 2086+45.84

'2A' ALIGNMENT COORDINATES

DESCRIPTION	STATION	NORTHING	EASTING
BOP	1911+50	137735.81'	485279.36'
EOP	1930+00	136526.96'	483878.94'

CONTROL POINTS

POINT NUMBER	EXISTING STATION	FUTURE STATION	OFFSET	NORTHING	EASTING	ELEVATION	DESCRIPTION
4	1951+06.51	1932+68.57	46.33 LT	136318.44	483706.68	427.00	PRIM MON SET MP 314.4
5	1916+64.10	1898+26.16	95.94 RT	138603.31	486308.38	412.16	PRIM MON SET MP 315.2
201	1934+66.34	1916+28.40	40.97 RT	137456.66	484891.44	389.55	REBAR CAP SET
601	1934+04.95	1915+67.01	58.43 LT	137422	485003	394.90	RR SPIKE IN 12" COTTONWOOD
602	1936+29.86	1917+91.92	51.99 RT	137358	484760	391.59	SPIKE IN 12" BIRCH
805	1936+70.96	1918+33.02	25.97 LT	137272.28	484780.30	395.03	REBAR CAP FND
806	1918+94.03	1900+56.09	185.05 RT	138579.99	486047.17	403.95	REBAR CAP FND
891	1935+26.55	1916+88.61	15.28 LT	137374.72	484882.59	396.80	USCG MON E119

PROJECT CONTROL

Preliminary Plans

PLANS DEVELOPED BY: MICHAEL BAKER INTERNATIONAL, AECC103, 3900 C STREET SUITE 900, ANCHORAGE, AK 99503 (907) 273-1600
T:\AKDOT\148830 - DOT&PF Parks 305-325 PI\04 CADD\LGS PS&E\60657_ProjCont_LGS-Project Control Fri, Jun/26/20 11:16am

NO.	DATE	REVISION

STATE	PROJECT DESIGNATION	YEAR	SHEET NO.	TOTAL SHEETS
ALASKA	PENDING/NFHWY00476	2020	B1	B1

GENERAL TYPICAL SECTION NOTES:

1. REMOVE ALL EXISTING ASPHALT BETWEEN "2A" 1911+50 AND "2A" 1930+00. REMOVAL OF ASPHALT WILL BE PAID FOR UNDER 202.0002.0000.
2. APPLY STE-1 TACK COAT BETWEEN ATB LIFTS AND ATB AND HMA, TYPE II, CLASS "B".
3. REMOVE EXISTING ORGANIC MAT UNDER PROPOSED TOE PRIOR TO PLACING BORROW, PAID FOR AS 201.0009.0000 CLEARING AND GRUBBING.
4. CLEARING AND GRUBBING LIMITS EXTEND 10 FT PAST THE PROPOSED TOE OF SLOPE.
5. POINT OF SUPERELEVATION ROTATION IS ABOUT CENTERLINE.
6. GUARDRAIL WIDENING
   - 6.1. GUARDRAIL POST HEIGHT AND LENGTH ACCORDING TO STANDARD PLAN G-10.11.
   - 6.2. CONSTRUCT SAFETY EDGE AT GUARDRAIL LOCATIONS.
   - 6.3. GUARDRAIL WIDENING APPLIES TO ALL GUARDRAIL LOCATIONS.

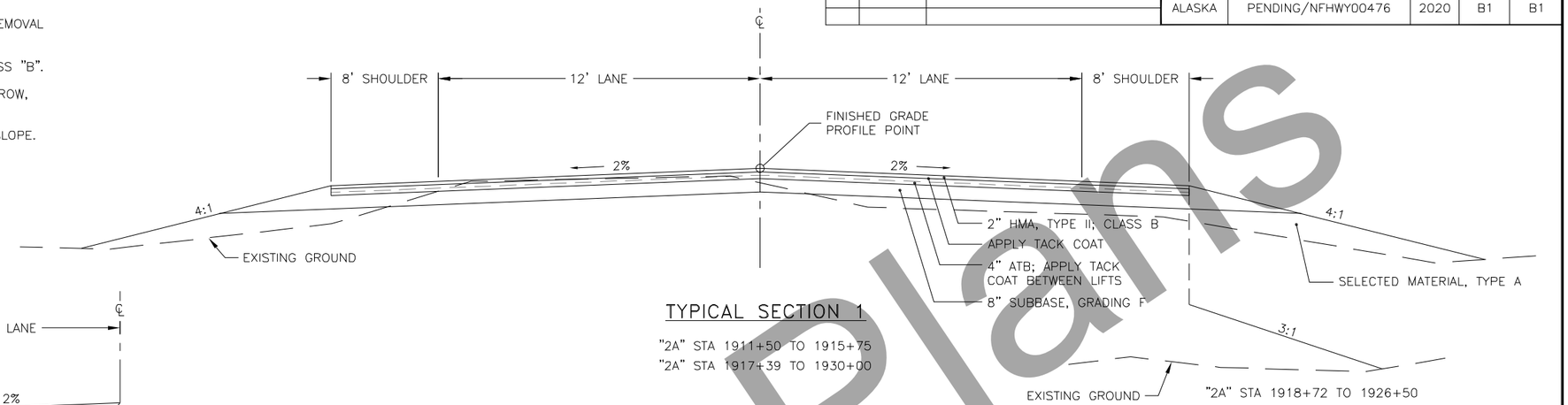

TYPICAL SECTION 1

"2A" STA 1911+50 TO 1915+75
"2A" STA 1917+39 TO 1930+00

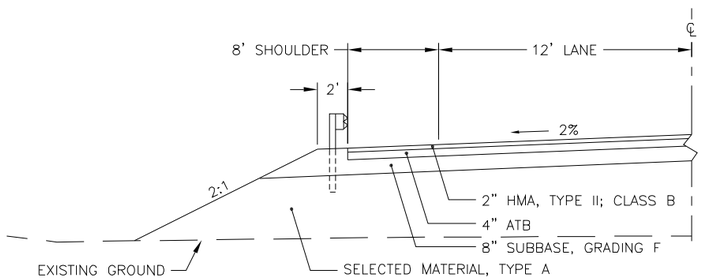

WIDENING FOR GUARDRAIL

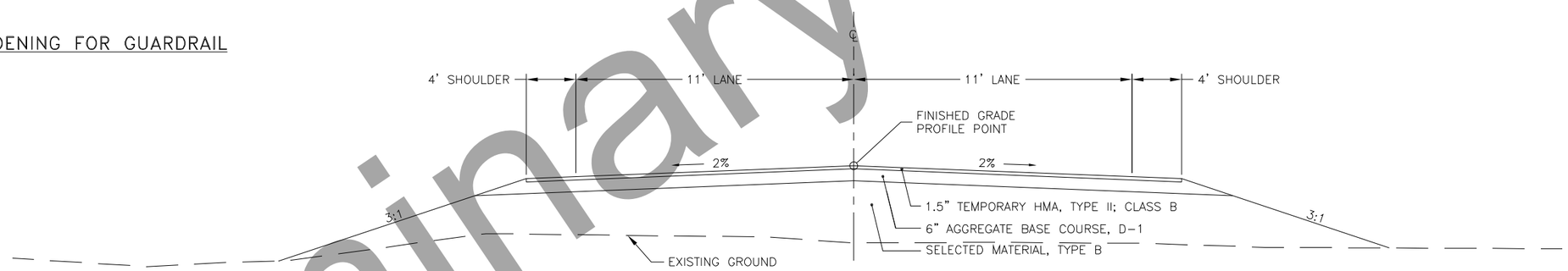

TEMPORARY CROSSING TYPICAL SECTION

"D" STA 3+50 TO 25+15

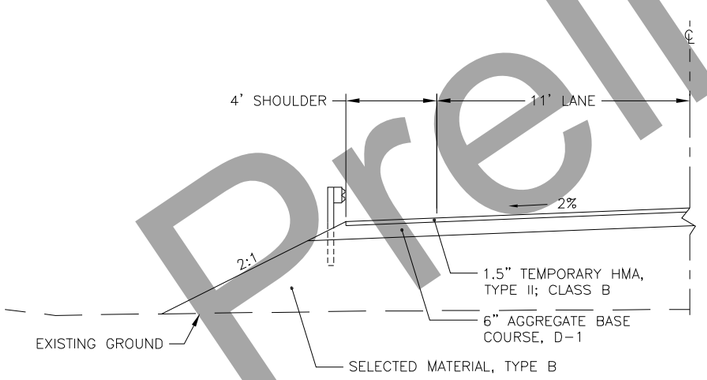

BARRIER ALTERNATIVE 1: W-BEAM GUARDRAIL

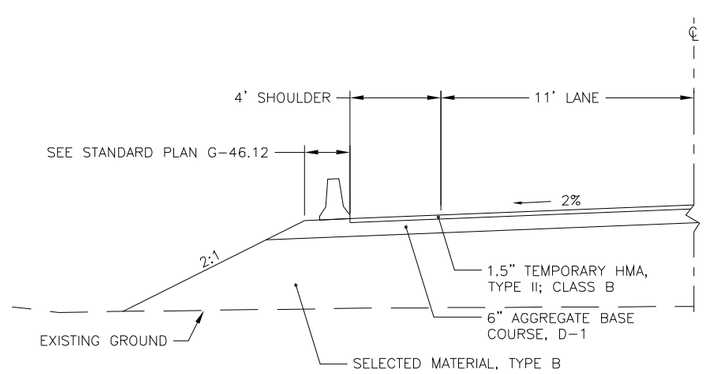

BARRIER ALTERNATIVE 2 WITH WIDENING: RIGID CONCRETE BARRIER

TYPICAL SECTIONS

Preliminary Plans

PLANS DEVELOPED BY: MICHAEL BAKER INTERNATIONAL, AECC103, 3900 C STREET SUITE 900, ANCHORAGE, AK 99503 (907) 273-1600
T:\AKDOT\148830 - DOT&PF Parks 305-325 PI\04 CADD\LGS PS&E\60657_TypSec_LGS-TYPICAL SECTIONS 1 Thu, Jul/23/20 11:48am

NO.	DATE	REVISION	STATE	PROJECT DESIGNATION	YEAR	SHEET NO.	TOTAL SHEETS
			ALASKA	PENDING/NFHWY00476	2020	C1	C1

ESTIMATE OF QUANTITIES

ITEM NO.	PAY ITEM	UNIT	QUANTITY
201.0009.0000	CLEARING AND GRUBBING	LUMP SUM	ALL REQUIRED
202.0002.0000	REMOVAL OF PAVEMENT	SQUARE YARD	10,530
202.0017.0000	REMOVAL OF CULVERT PIPE	EACH	2
202.0010.0000	SINGLE MAIL BOX INSTALLATION	EACH	1
202.0023.0000	REMOVAL OF BRIDGE	LUMP SUM	ALL REQUIRED
203.0003.0000	UNCLASSIFIED EXCAVATION	CY	3,155
203.0006.000A	BORROW, TYPE A	TON	33,179
205.0006.0000	STRUCTURAL FILL	CY	1,205
301.0001.00D1	AGGREGATE BASE COURSE, GRADING D-1	TON	1,107
304.0001.000F	SUBBASE, GRADING F	TON	4,339
306.0001.0000	ATB	TON	1,844
306.0002.5228	ASPHALT BINDER, GRADE PG 52-28	TON	83
401.0001.002B	HMA, TYPE II, CLASS B	TON	1,460
401.0004.5240	ASPHALT BINDER, GRADE PG 52-40	TON	88
401.0009.0000	LONGITUDINAL JOINT DENSITY PRICE ADJUSTMENT	CONTINGENT SUM	ALL REQUIRED
401.0015.0000	ASPHALT MATERIAL PRICE ADJUSTMENT	CONTINGENT SUM	ALL REQUIRED
402.0001.STE1	STE-1 ASPHALT FOR TACK COAT	TON	5.6
406.0004.0000	RUMBLE STRIPS	LUMP SUM	ALL REQUIRED
501.0001.0000	CLASS A CONCRETE	LUMP SUM	ALL REQUIRED
501.0007.0000	PRECAST CONCRETE MEMBER, (122'-6")	EACH	7
503.0001.0000	REINFORCING STEEL	LUMP SUM	ALL REQUIRED
503.0002.0000	EPOXY-COATED REINFORCING STEEL	LUMP SUM	ALL REQUIRED
505.0005.2405	FURNISH STRUCTURAL STEEL PILES, 2'-0" DIA. X 1/2" PIPE	LINEAR FOOT	1,653.0
505.0006.2405	DRIVE STRUCTURAL STEEL PILES, 2'-0" DIA. X 1/2" PIPE	EACH	14
507.0001.0002	STEEL BRIDGE RAILING, 2-TUBE	LINEAR FOOT	328
508.0001.0000	WATERINGPROOFING MEMBRANE, SPRAY-APPLIED	LUMP SUM	ALL REQUIRED
520.0001.0000	TEMPORARY CROSSING	LUMP SUM	ALL REQUIRED
603.0001.0024	CSP 24 INCH	LINEAR FOOT	201
606.0001.0000	W-BEAM GUARDRAIL	LINEAR FOOT	288
606.0006.0000	REMOVING AND DISPOSING OF GUARDRAIL	LINEAR FOOT	510.8
606.0009.0000	SHORT RADIUS GUARDRAIL	EACH	2
606.0013.0000	PARALLEL GUARDRAIL TERMINAL	EACH	2
606.0016.0000	TRANSITION RAIL	EACH	4
611.0001.0001	RIPRAP, CLASS I	CUBIC YARD	20
611.0001.0002	RIPRAP, CLASS II	CUBIC YARD	1,330
615.0001.0000	STANDARD SIGN	SQUARE FOOT	19.00
615.0002.0000	REMOVE AND RELOCATE SIGN	EACH	13
618.0002.0000	SEEDING	POUNDS	250
631.0002.0001	GEOTEXTILE, EROSION CONTROL, CLASS 1	SQUARE YARD	145
639.0001.0000	APPROACH	EACH	6
640.0001.0000	MOBILIZATION & DEMOBILIZATION	LUMP SUM	ALL REQUIRED
641.0001.0000	EROSION, SEDIMENT, AND POLLUTION CONTROL ADMINISTRATION	LUMP SUM	ALL REQUIRED
641.0003.0000	TEMPORARY EROSION, SEDIMENT, AND POLLUTION CONTROL	LUMP SUM	ALL REQUIRED
641.0004.0000	TEMPORARY EROSION, SEDIMENT, AND POLLUTION CONTROL ADDITITIVES	CONTINGENT SUM	ALL REQUIRED
641.0006.0000	WITHHOLDINGS	CONTINGENT SUM	ALL REQUIRED
641.0007.0000	SWPPP MANAGER	LUMP SUM	ALL REQUIRED
642.0001.0000	CONSTRUCTION SURVEYING	LUMP SUM	ALL REQUIRED
642.0013.0000	THREE PERSON SURVEY PARTY	CONTINGENT SUM	ALL REQUIRED
643.0002.0000	TRAFFIC MAINTENANCE	LUMP SUM	ALL REQUIRED
643.0003.0000	PERMANENT CONSTRUCTION SIGNS	LUMP SUM	ALL REQUIRED
643.0023.0000	TRAFFIC PRICE ADJUSTMENT	CONTINGENT SUM	ALL REQUIRED
643.0025.0000	TRAFFIC CONTROL	CONTINGENT SUM	ALL REQUIRED
644.0001.0000	FIELD OFFICE	LUMP SUM	ALL REQUIRED
644.0002.0000	FIELD LABORATORY	LUMP SUM	ALL REQUIRED
644.0006.0000	VEHICLES	LUMP SUM	ALL REQUIRED
644.0015.0000	NUCLEAR TESTING EQUIPMENT STORAGE SHED	EACH	1
644.2001.0000	ENGINEERING COMMUNICATIONS, MOBILE HOT SPOTS	LUMP SUM	ALL REQUIRED
645.0001.0000	TRAINING PROGRAM, 1 TRAINEES/APPRENTICES	HOURS	500
646.0001.0000	CPM SCHEDULING	LUMP SUM	ALL REQUIRED
670.0001.0000	PAINTED TRAFFIC MARKINGS	LUMP SUM	ALL REQUIRED

ESTIMATE OF LUMP SUM QUANTITIES

ITEM NO.	PAY ITEM	UNIT	QUANTITY
201.0009.0000	CLEARING AND GRUBBING	ACRE	3.5
406.0004.0000	RUMBLE STRIPS	MILE	0.7
670.0001.0000	PAINTED TRAFFIC MARKINGS	LINEAR FOOT	5,550

TEMPORARY CROSSING ESTIMATE OF QUANTITIES 520.0001.0000

PAY ITEM	UNIT	QUANTITY
CLEARING	ACRE	1.7
BORROW, SELECTED MATERIAL, TYPE B	TON	6509
UNCLASSIFIED EXCAVATION	CUBIC YARDS	106
AGGREGATE BASE COURSE, GRADING D-1	TON	1979
TEMPORARY HMA, TYPE II CLASS B	TON	510
ASPHALT BINDER, GRADE PG 52-28	TON	28
10-FOOT CMP CULVERT	LINEAR FOOT	90
GUARDRAIL / CONCRETE BARRIER	LINEAR FOOT	813
PARALLEL GUARDRAIL TERMINAL	EACH	4
SEEDING	LBS	114
PAINTED TRAFFIC MARKINGS	LINEAR FOOT	8223

ESTIMATING FACTORS

ITEM NO.	PAY ITEM	VALUE
203.0006.000A	BORROW	1.94 TON/CY
205.0006.0000	STRUCTURAL FILL	1.94 TON/CY
301.0001.00D1	AGGREGATE BASE COURSE, GRADING D-1	1.94 TON/CY
301.0001.00E1	AGGREGATE BASE COURSE, GRADING E-1	1.94 TON/CY
304.0001.000F	SUBBASE, GRADING F	1.94 TON/CY
306.0001.0000	ATB	2.00 TON/CY
306.0002.5228	ASPHALT BINDER, GRADE PG 52-28	4.5% WEIGHT OF 306.0001.0000
401.0001.002B	HOT MIX ASPHALT, TYPE II; CLASS B	2.04 TON/CY
402.0001.0000	STE-1 ASPHALT FOR TACK COAT	0.00024 TON/SY
618.0002.0000	SEEDING	1.5 LB/MSF

GENERAL NOTES

1. PERFORM ALL WORK WITHIN THE EXISTING RIGHT-OF-WAY.
2. PRESERVE EXISTING PRIMARY AND SECONDARY MONUMENTS TO THE EXTENT PRACTICABLE. REPLACE MONUMENTS DISTURBED BY CONSTRUCTION ACTIVITIES AS FOLLOWS: REPLACE DESTROYED MONUMENTS WITH 2 REFERENCE MONUMENTS OUTSIDE THE CONSTRUCTION FOOTPRINT. THIS WORK WILL NOT BE MEASURED OR PAID FOR DIRECTLY, BUT IS SUBSIDIARY TO PAY ITEM 642.0001.0000.
3. FUEL STORAGE WILL NOT BE ALLOWED WITHIN 100-FT OF WATER BODIES AND MUST HAVE SECONDARY CONTAINMENT.
4. LOCATE AND INSTALL TEMPORARY PLASTIC BARRIER SUSPENDED ON HAND DRIVEN STAKES AS SHOWN ON PLANS, NOTED AS ENVIRONMENTAL SENSITIVE AREA. LOCATION IS SUBJECT TO REVISION, TO AVOID DISTURBANCE TO THE SITE. SEE SPECIFICATION 642 FOR ARCHAEOLOGICAL BUFFER FENCING.

UTILITY NOTES:

1. LOCATE & PROTECT ALL UTILITIES PRIOR TO CONSTRUCTION. ALL UTILITIES WITHIN THE PROJECT SHALL REMAIN IN PLACE AND IN SERVICE DURING CONSTRUCTION. THE PRESENCE AND LOCATION OF UTILITIES SHOWN ARE BASED OFF OF LIMITED SURVEY, UTILITY PERMITS & SYSTEM MAPS. THE CONTRACTOR IS RESPONSIBLE FOR VERIFYING THE PRESENCE AND LOCATION OF UTILITIES IN THE FIELD PRIOR TO PERFORMING ANY EARTH DISTURBING ACTIVITIES. CALL THE DIGLINE AT 1-800-478-3121 OR 811 FOR LOCATES.
2. PROTECT, OR REMOVE AND REPLACE EXISTING UTILITY MARKER POSTS. THIS WORK IS SUBSIDIARY TO OTHER PAY ITEMS.

Preliminary Plans

ESTIMATE OF QUANTITIES

PLANS DEVELOPED BY: MICHAEL BAKER INTERNATIONAL, AECC103, 3900 C STREET SUITE 900, ANCHORAGE, AK 99503 (907) 273-1600
T:\AKDOT\148830 - DOT&PF Parks 305-325 P\04 CADD\LGS PS&E\60657_Quantities_LGS-QUANTITIES Thu, Jul/23/20 02:35pm

NO.	DATE	REVISION	STATE	PROJECT DESIGNATION	YEAR	SHEET NO.	TOTAL SHEETS
			ALASKA	PENDING/NFHWY00476	2020	D1	D1

CULVERT SUMMARY

STATION	202.0004.0000 REMOVAL OF CULVERT PIPE		INLET			OUTLET			NEW CULVERT LENGTH (FT)	REMARKS
	DIAMETER (IN)	REMOVE (FT)	STATION	OFFSET	INVERT ELEVATION	STATION	OFFSET	INVERT ELEVATION	603.0001.0024	
"2A" 1919+05	24	50	"2A" 1919+28	64.2 RT	389.01	"2A" 1918+83	83.7 RT	388.99	50	APPROACH CULVERT
"2A" 1920+38	24	118	"2A" 1921+18	44.2 RT	394.35	"2A" 1919+69	63.6 RT	392.5	151	APPROACH CULVERT
								TOTAL	201	

CULVERT NOTES:

1. CULVERT LOCATIONS AND ORIENTATION ARE SUBJECT TO MINOR REVISIONS BY THE ENGINEER.
2. DITCH WORK AND RE-GRADING REQUIRED FOR NEW CULVERTS IS SUBSIDIARY TO 603 PAY ITEMS. SEE SHEET E1 FOR TYPICAL CULVERT TRENCH DETAIL.
3. INSTALL CULVERTS WITH A MINIMUM CAMBER EQUAL TO 1% OF THE LENGTH OF THE PIPE, OR AS DIRECTED BY THE ENGINEER.

606 GUARDRAIL ITEMS SUMMARY

BEGIN STATION	END STATION	RT/LT	606.0001.0000 W-BEAM GUARDRAIL (LINEAR FOOT)	606.0006.0000 REMOVING AND DISPOSING OF GUARDRAIL (LINEAR FOOT)	606.0013.0000 PARALLEL GUARDRAIL TERMINAL (EACH)	606.0016.0000 TRANSITION RAIL (EACH)	606.0009.0000 SHORT RADIUS GUARDRAIL (EACH)	REMARKS
"2A" 1914+89.4	"2A" 1916+17.3	RT		127.9				INCLUDES GUARDRAIL/BRIDGE RAIL TRANSITION
"2A" 1914+89.8	"2A" 1916+17.4	LT		127.6				INCLUDES GUARDRAIL/BRIDGE RAIL TRANSITION
"2A" 1916+89.0	"2A" 1918+16.7	RT		127.7				INCLUDES GUARDRAIL/BRIDGE RAIL TRANSITION
"2A" 1916+89.2	"2A" 1918+16.8	LT		127.6				INCLUDES GUARDRAIL/BRIDGE RAIL TRANSITION
"2A" 1914+66.5	"2A" 1915+75.0	LT	37.5		1	1		
"2A" 1914+36.4	"2A" 1915+75.0	RT	100			1	1	
"2A" 1917+39.0	"2A" 1919+06.7	LT	112.5			1	1	
"2A" 1917+39.0	"2A" 1918+47.5	RT	37.5		1	1		
		TOTAL	287.5	510.8	2	4	2	

GUARDRAIL NOTES:

1. FOR PARALLEL GUARDRAIL TERMINALS, CONSTRUCT THE GUARDRAIL TERMINAL WIDENING IN ACCORDANCE WITH THE STANDARD GUARDRAIL TERMINAL WIDENING DETAIL ON STANDARD PLAN G-20.12. THE END OFFSET (X) SHALL BE 2 FEET.
2. INSTALL GUARDRAIL POSTS IN ACCORDANCE WITH STANDARD PLAN G-10.20.

202.0010.0000 MAILBOX SUMMARY

NUMBER OF EXISTING MAILBOXES	EXISTING STATION	LOCATION
1	"2A" 1914+23	LT

MAILBOX NOTES:

1. CONSTRUCT THE MAILBOX IN ACCORDANCE WITH THE "WOOD POST (RURAL) INSTALLATION" AND "TYPICAL WOOD CANTILEVER INSTALLATION" SHOWN ON STANDARD PLANS M-20.14 AND M-23.12 RESPECTIVELY.

670.0001.0000 PAINTED TRAFFIC MARKING SUMMARY

DESCRIPTION	QUANTITY (LF)
4" W	3,700
4" DY	1,850

TRAFFIC MARKING NOTES:

1. INSTALL LANE EDGE AND CENTERLINES PER STANDARD PLANS T-21.03.
2. IF STRIPING IS NOT ALIGNED AT BOP/EOP, TRANSITION STRIPING OVER 100 FEET TO MATCH EXISTING.

Preliminary Plans

PLANS DEVELOPED BY: MICHAEL BAKER INTERNATIONAL, AECC103, 3900 C STREET SUITE 900, ANCHORAGE, AK 99503 (907) 273-1600
T:\AKDOT\148830 - DOT&PF Parks 305-325 PI\04 CADD\LGS PS&E\60657_Quantities_LGS-SUMMARIES Thu, Jul/23/20 02:00pm

SUMMARIES

NO.	DATE	REVISION

STATE	PROJECT DESIGNATION	YEAR	SHEET NO.	TOTAL SHEETS
ALASKA	PENDING/NFHWY00476	2020	E1	E2

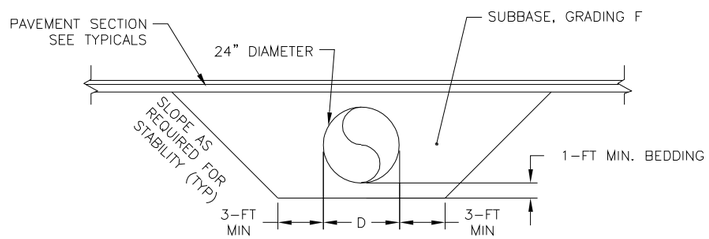

TYPICAL CULVERT TRENCH DETAIL

NTS

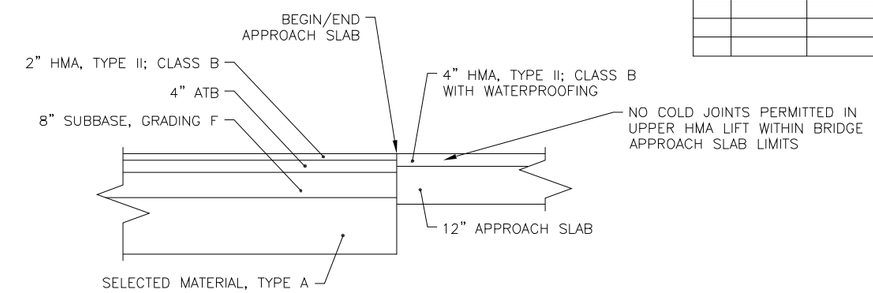

APPROACH SLAB/PAVEMENT TRANSITION

GUARDRAIL MARKER POST DETAIL

CROSS-SECTIONAL VIEW

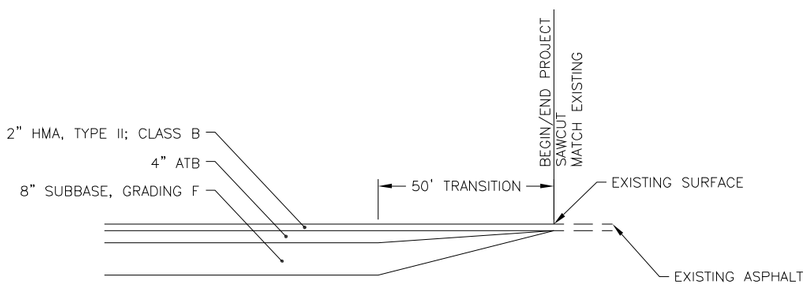

TRANSITION FROM TYPICAL SECTION 1 TO EXISTING

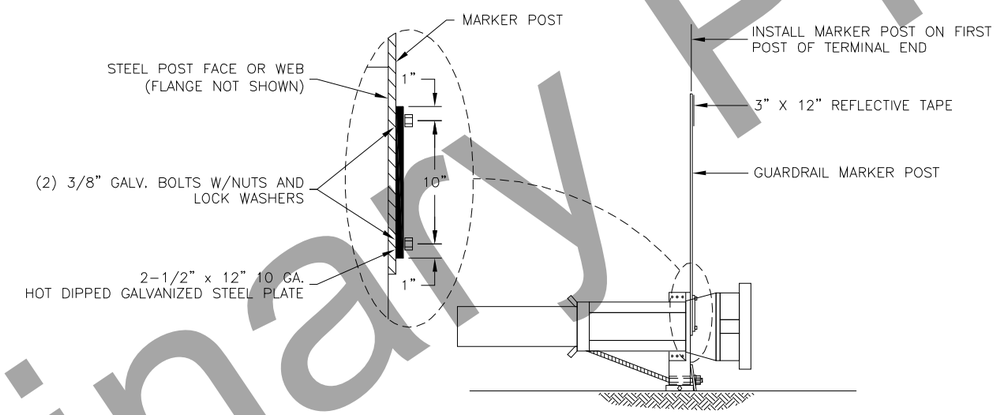

GUARDRAIL MARKER POST ATTACHMENT DETAIL

PARALLEL GUARDRAIL TERMINAL

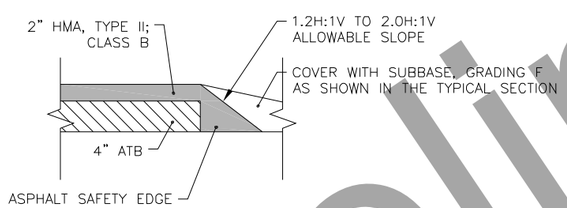

ASPHALT SAFETY EDGE DETAIL

ASPHALT SAFETY EDGE NOTES:

1. LABOR AND EQUIPMENT REQUIRED TO CONSTRUCT THE SAFETY EDGE IS SUBSIDIARY TO PAY ITEM 306.0001.0000 AND 401.0001.002B.
2. MATERIAL WILL BE MEASURED AND PAID UNDER PAY ITEMS 306.0001.0000 AND 401.0001.002B RESPECTIVELY.
3. DO NOT CONSTRUCT THE SAFETY EDGE ACROSS DRIVEWAYS, BRIDGE, OR BRIDGE SLABS.

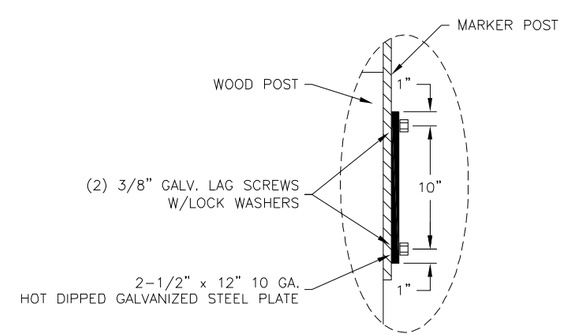

GUARDRAIL MARKER POST ATTACHMENT DETAIL

SHORT RADIUS GUARDRAIL

GUARDRAIL MARKER NOTES:

1. GUARDRAIL MARKER POSTS SHALL BE YELLOW AND AT LEAST 72" LONG. POSTS SHALL MEET THE REQUIREMENTS OF SECTION 730-2.05 FLEXIBLE DELINEATOR POSTS.
2. RETROREFLECTIVE SHEETING SHALL MEET ASTM D4956 REQUIREMENTS FOR TYPE VIII, IX, OR XI. COLOR OF RETROREFLECTIVE SHEETING SHALL MATCH COLOR OF ADJACENT EDGE LINE STRIPE. PLACE RETROREFLECTIVE SHEETING ON SIDE OF MARKER POST FACING TRAFFIC IN ADJACENT LANE.
3. PLACE CENTER OF MARKER POST IN LINE WITH TRAFFIC SIDE OF POST.
4. DRILL ALL BOLT HOLES. COAT HOLES WITH ZINC RICH PAINT. FLAME CUTTING SHALL NOT BE PERMITTED.
5. ON SHORT RADIUS GUARDRAIL SECTIONS, ATTACH GUARDRAIL MARKER POST TO THE GUARDRAIL POST AT THE POINT OF TANGENCY (P.T.) SHOWN ON STANDARD PLAN G-26.
6. ALL WORK AND MATERIAL REQUIRED TO INSTALL GUARDRAIL MARKER POSTS IS SUBSIDIARY TO 606 PAY ITEMS.

DETAILS

Preliminary Plans

PLANS DEVELOPED BY: MICHAEL BAKER INTERNATIONAL, AECC103, 3900 C STREET SUITE 900, ANCHORAGE, AK 99503 (907) 273-1600
T:\AKDOT\148830 - DOT&PF Parks 305-325 PI\04 CADD\LGS PS&E\60657_DTL_LGS-CULVERT CROSSING DETAIL 1 Thu, Jul/23/20 11:49am

NO.	DATE	REVISION

STATE	PROJECT DESIGNATION	YEAR	SHEET NO.	TOTAL SHEETS
ALASKA	PENDING/NFHWY00476	2020	E2	E2

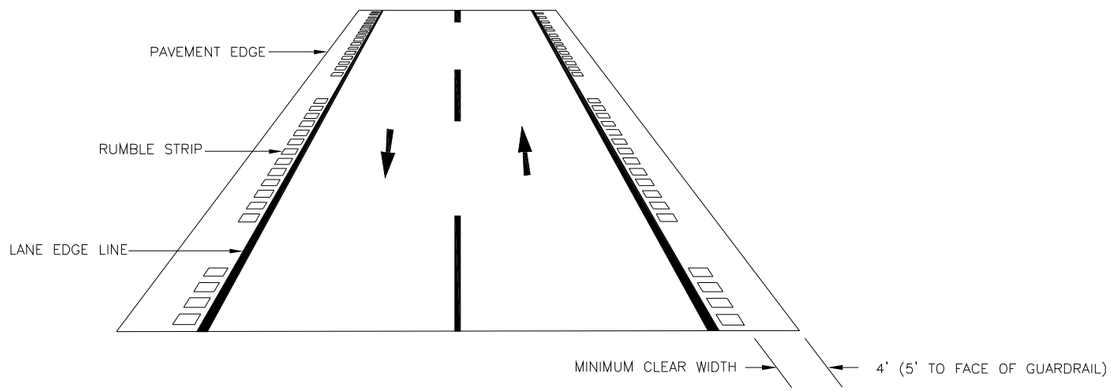

TYPICAL SHOULDER INSTALLATION – TWO-WAY
PERSPECTIVE VIEW

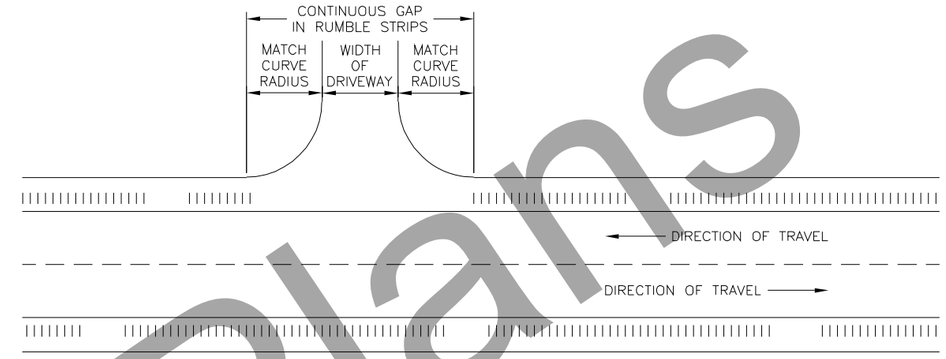

RUMBLE STRIP LAYOUT AT APPROACHES

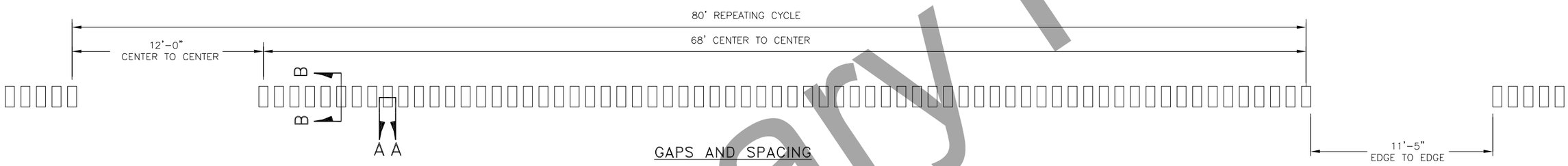

GAPS AND SPACING

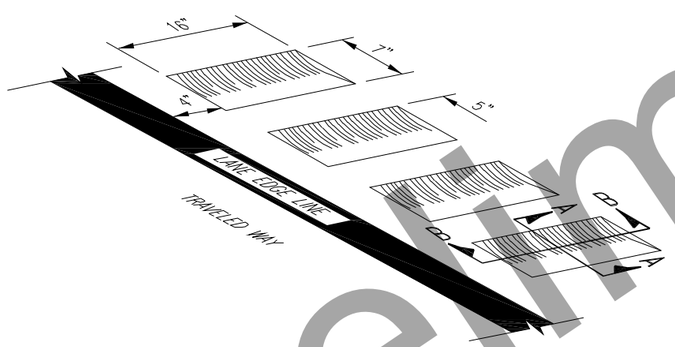

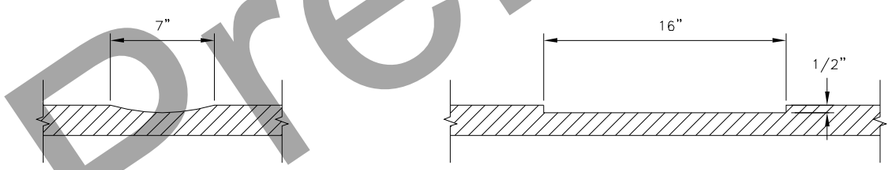

SECTION A–A

SECTION B–B

TYPICAL SHOULDER INSTALLATION DETAIL

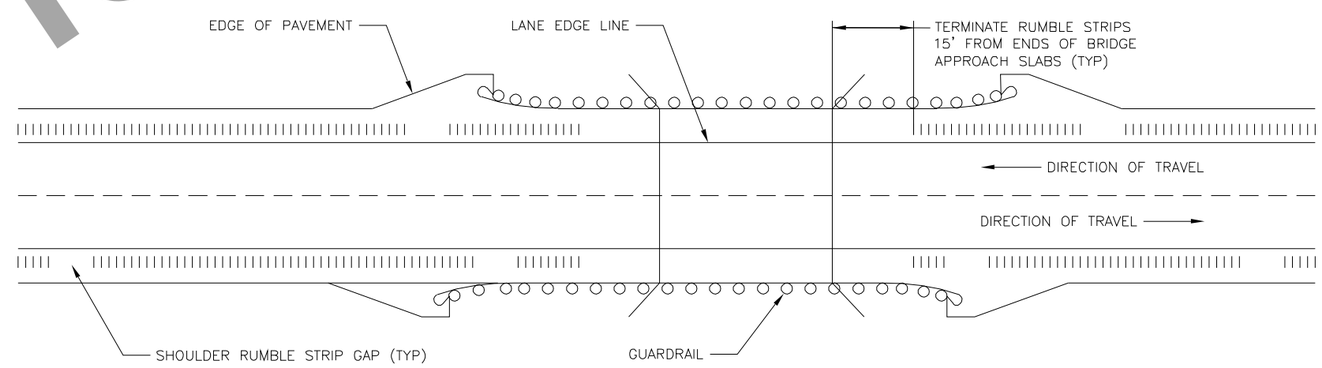

RUMBLE STRIP LAYOUT AT BRIDGE

RUMBLE STRIP DETAILS

Preliminary Plans

PLANS DEVELOPED BY: MICHAEL BAKER INTERNATIONAL, AECC103, 3900 C STREET SUITE 900, ANCHORAGE, AK 99503 (907) 273-1600
T:\AKDOT\148830 - DOT&PF Parks 305-325 PI\04 CADD\LGS PS&E\60657_DTL_LGS-RUMBLE STRIP Thu, Jul/23/20 11:49am

NO.	DATE	REVISION

STATE	PROJECT DESIGNATION	YEAR	SHEET NO.	TOTAL SHEETS
ALASKA	PENDING/NFHWY00476	2020	F1	F4

PLAN VIEW KEY

(P) STATION DIAMETER X LENGTH — *INSTALL CULVERT*

(R) STATION DIAMETER X LENGTH — *REMOVE CULVERT*

(A) STATION TYPE, WIDTH — *CONSTRUCT APPROACH*

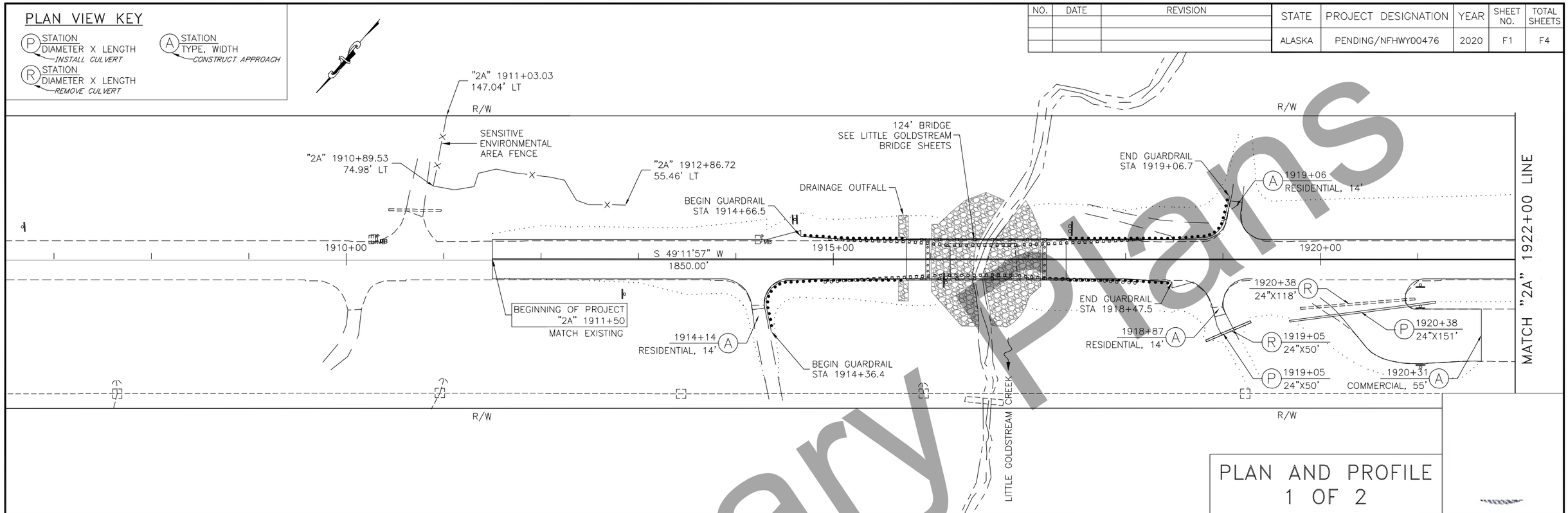

Preliminary Plans

PLANS DEVELOPED BY: MICHAEL BAKER INTERNATIONAL, AECC103, 3900 C STREET SUITE 900, ANCHORAGE, AK 99503 (907) 273-1600
T:\AKDOT\148830 - DOT&PF Parks 305-325 PI\04 CADD\LGS PS&E\60657_P&P_LGS-P&P_1 Thu, Jul/23/20 02:36pm

NO.	DATE	REVISION

STATE	PROJECT DESIGNATION	YEAR	SHEET NO.	TOTAL SHEETS
ALASKA	PENDING/NFHWY00476	2020	F2	F4

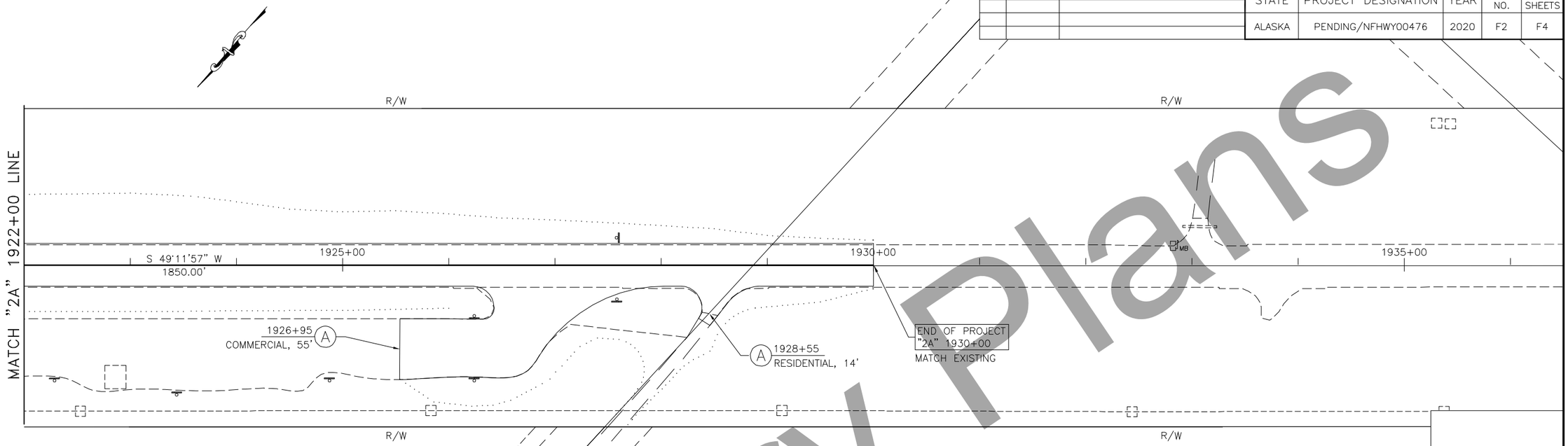

PLAN AND PROFILE
2 OF 2

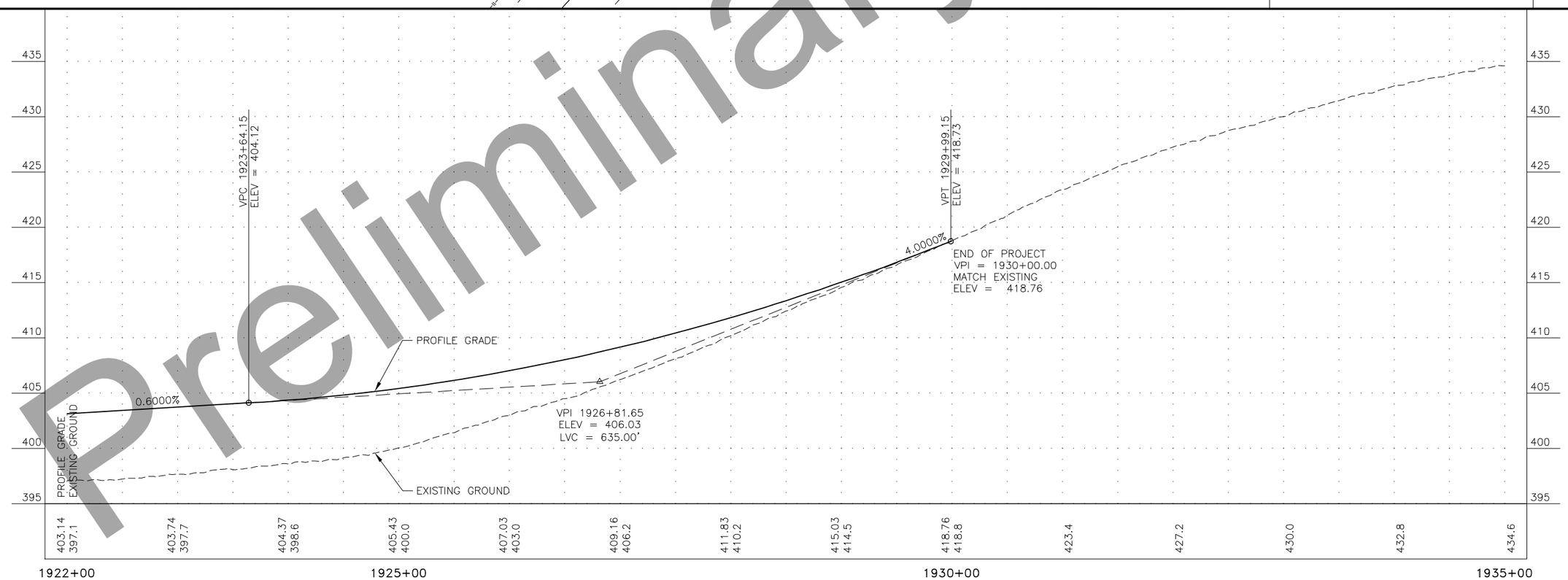

Preliminary Plans

PLANS DEVELOPED BY: MICHAEL BAKER INTERNATIONAL, AECC103, 3900 C STREET SUITE 900, ANCHORAGE, AK 99503 (907) 273-1600
T:\AKDOT\148830 - DOT&PF Parks 305-325 P\04 CADD\LGS PS&E\60657_P&P_LGS-P&P_2 Thu, Jul/23/20 02:36pm

NO.	DATE	REVISION

STATE	PROJECT DESIGNATION	YEAR	SHEET NO.	TOTAL SHEETS
ALASKA	PENDING/NFHWY00476	2020	F3	F4

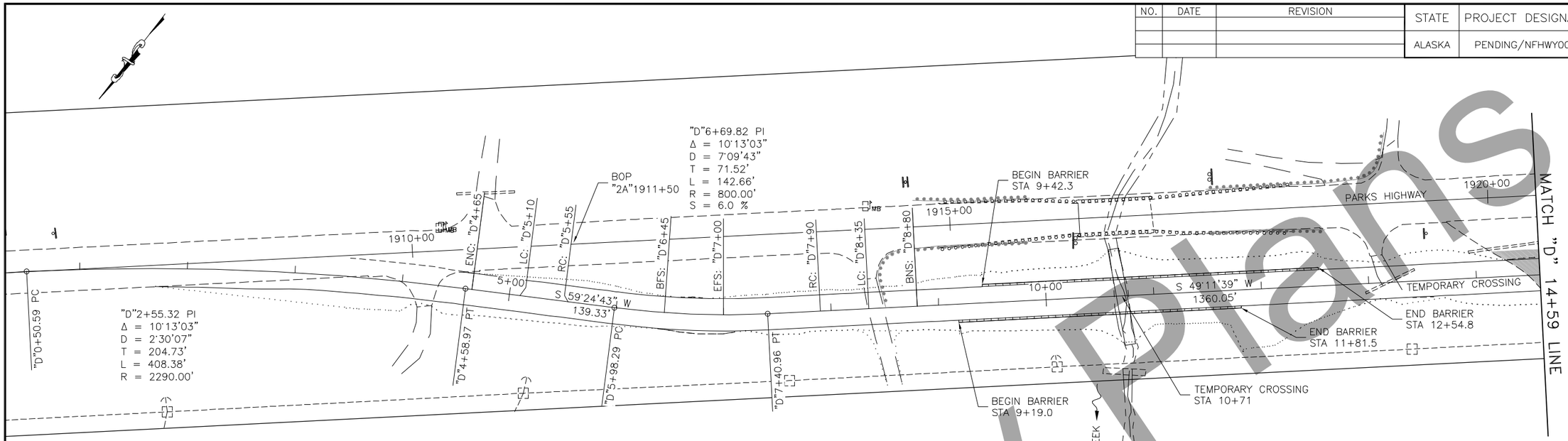

NOTES:

1. CONSTRUCT TEMPORARY CROSSING IN ACCORDANCE WITH SPECIFICATION 520, TEMPORARY CROSSING TYPICAL SECTION.
2. TEMPORARY CROSSING WAS MODELED WITH BARRIER ALTERNATIVE 1, SEE SHEET B1.
3. MAINTAIN ACCESS TO APPROACHES AT "2A" STATION 1910+00 AND 1914+14.

TEMPORARY CROSSING PLAN AND PROFILE 1 OF 2

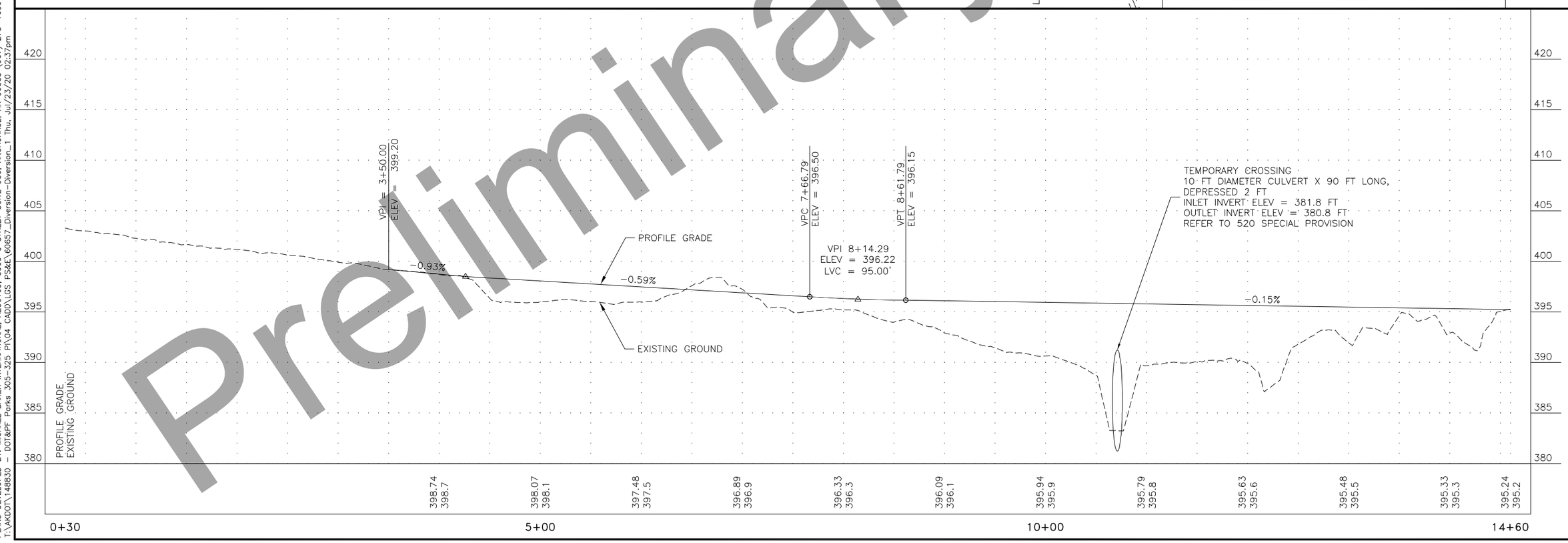

Preliminary Plans

PLANS DEVELOPED BY: MICHAEL BAKER INTERNATIONAL, AECC103, 3900 C STREET SUITE 900, ANCHORAGE, AK 99503 (907) 273-1600
T:\AKDOT\148830 - DOT&PF Parks 305-325 PI\04 CADD\LGS PS&E\60657_Diversion-Diversion_1 Thu, Jul/23/20 02:37pm

NO.	DATE	REVISION

STATE	PROJECT DESIGNATION	YEAR	SHEET NO.	TOTAL SHEETS
ALASKA	PENDING/NFHWY00476	2020	F4	F4

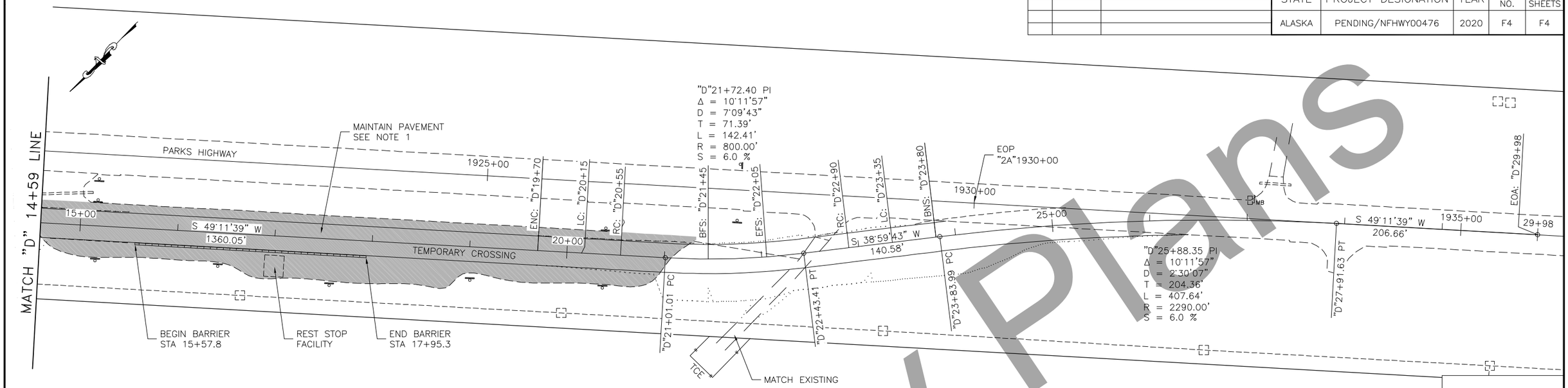

NOTES:

1. ANY DAMAGE TO THE REST STOP PAVEMENT DURING THE LIFE OF THIS PROJECT WILL BE REPAIRED AT THE CONTRACTOR'S EXPENSE.
2. REMOVE (5) LANDSCAPE BOULDERS AROUND REST STOP FACILITY WHILE DIVERSION IS OPEN. REINSTALL ROCKS UPON CLOSURE OF DIVERSION.
3. MAINTAIN ACCESS TO APPROACH AT "2A" STA 1928+55.

TEMPORARY CROSSING PLAN AND PROFILE 2 OF 2

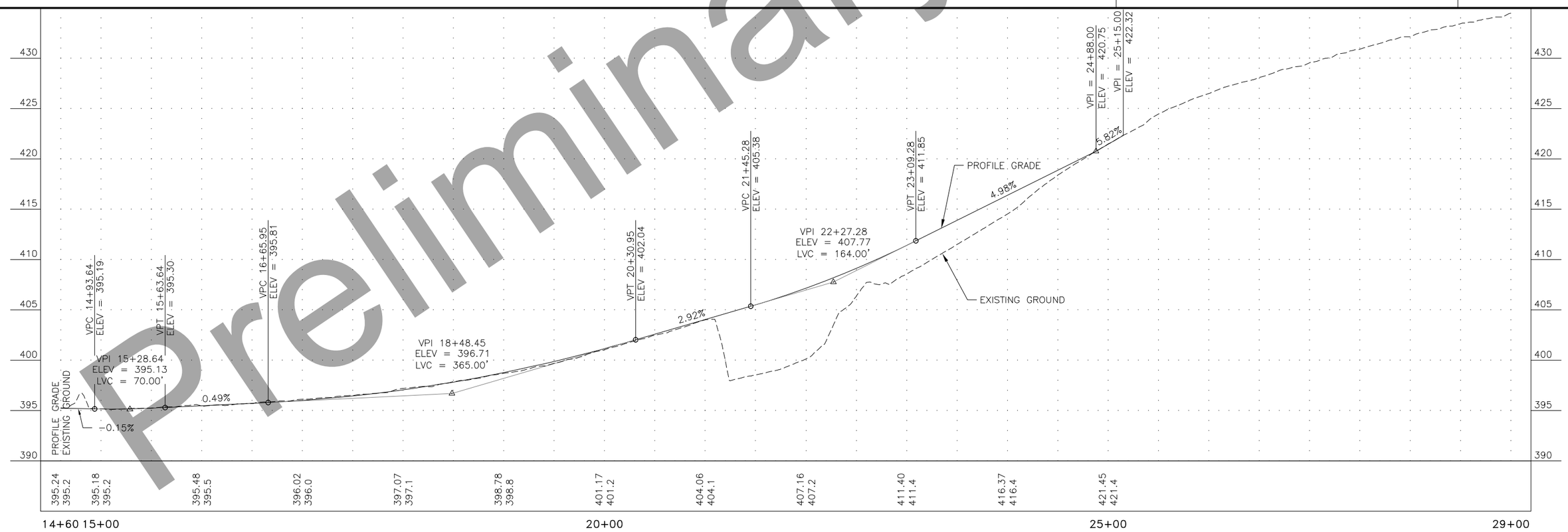

Preliminary Plans

PLANS DEVELOPED BY: MICHAEL BAKER INTERNATIONAL, AECC103, 3900 C STREET SUITE 900, ANCHORAGE, AK 99503 (907) 273-1600
T:\AKDOT\148830 - DOT&PF Parks 305-325 PI\04 CADD\LGS PS&E\60657_Diversion-Diversion_2 Thu, Jul/23/20 02:37pm

NO.	DATE	REVISION

STATE	PROJECT DESIGNATION	YEAR	SHEET NO.	TOTAL SHEETS
ALASKA	PENDING/NFHWY00476	2020	G1	G2

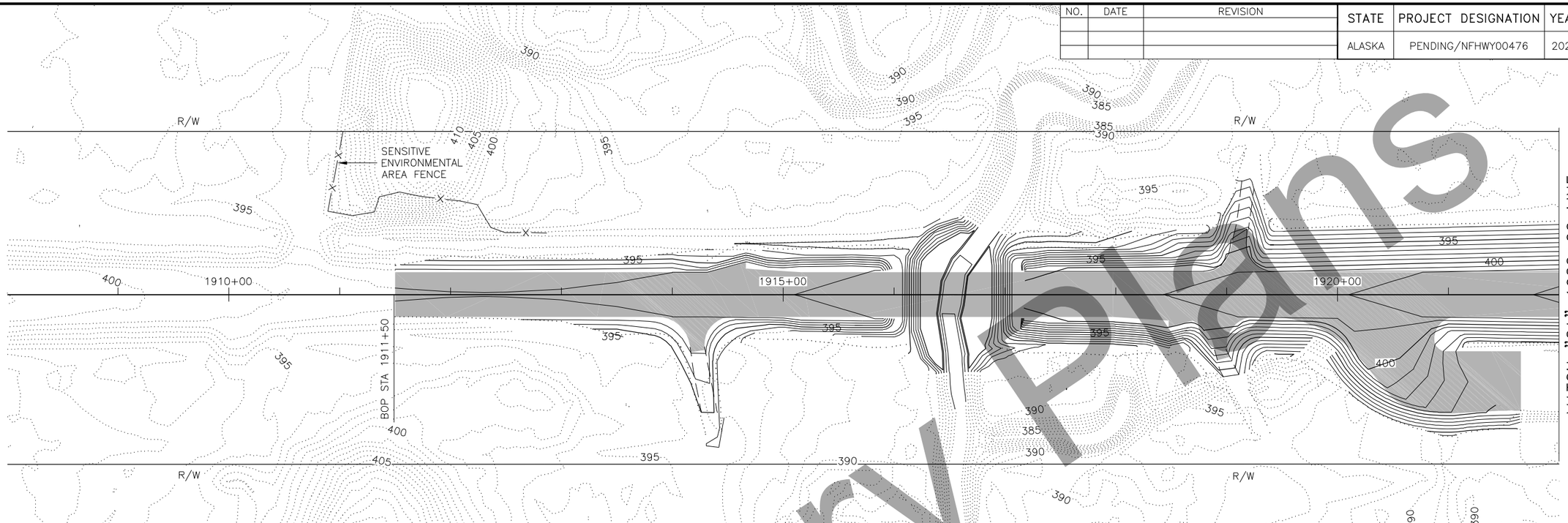

GRADING NOTES:

1. GRADING PLAN IS PROVIDED TO SHOW INTENT, TYPICAL SECTIONS CONTROL.
2. CONTOUR INTERVAL – 1–FT

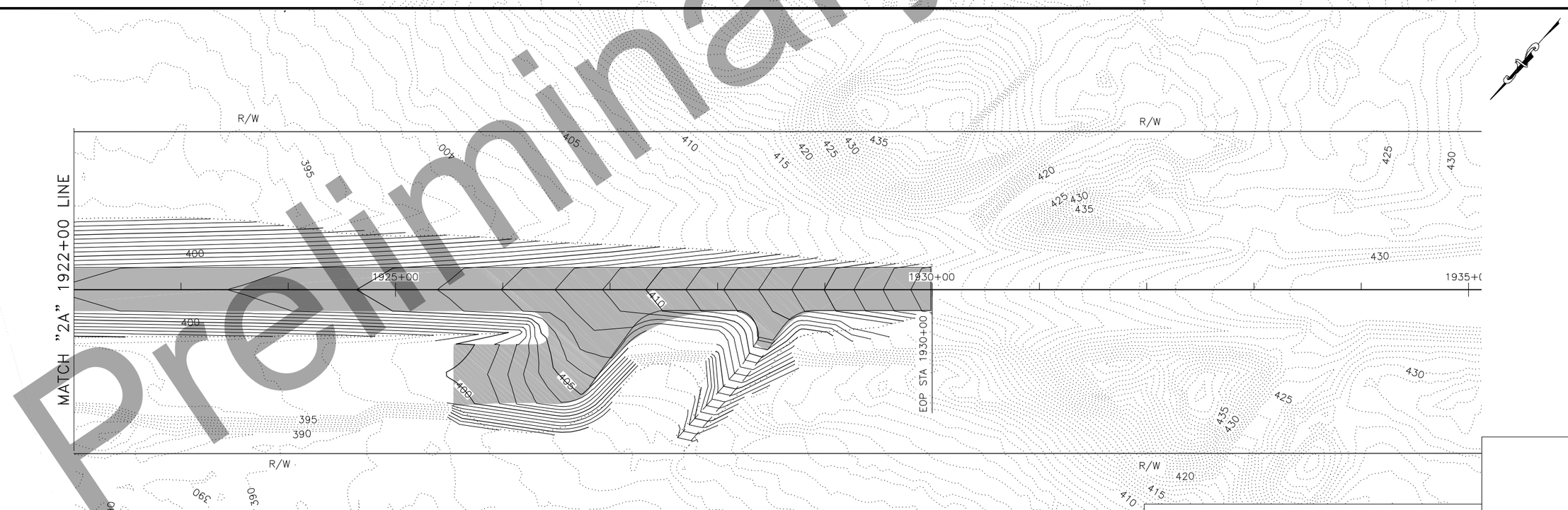

GRADING PLAN

Preliminary Plans

PLANS DEVELOPED BY: MICHAEL BAKER INTERNATIONAL, AECC103, 3900 C STREET, SUITE 900, ANCHORAGE, AK 99503 (907) 273-1600
T:\AKDOT\148830 – DOT&PF Parks 305–325 PI\04 CADD\LGS PS&E\60657_Grading_LGS–Grading Thu, Jul/23/20 11:51am

NO.	DATE	REVISION	STATE	PROJECT DESIGNATION	YEAR	SHEET NO.	TOTAL SHEETS
			ALASKA	PENDING/NFHWY00476	2020	G2	G2

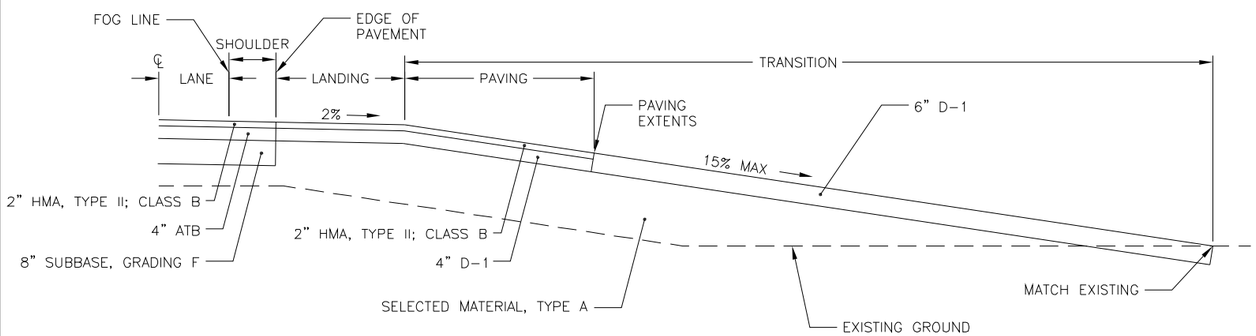

RESIDENTIAL APPROACH ELEVATION

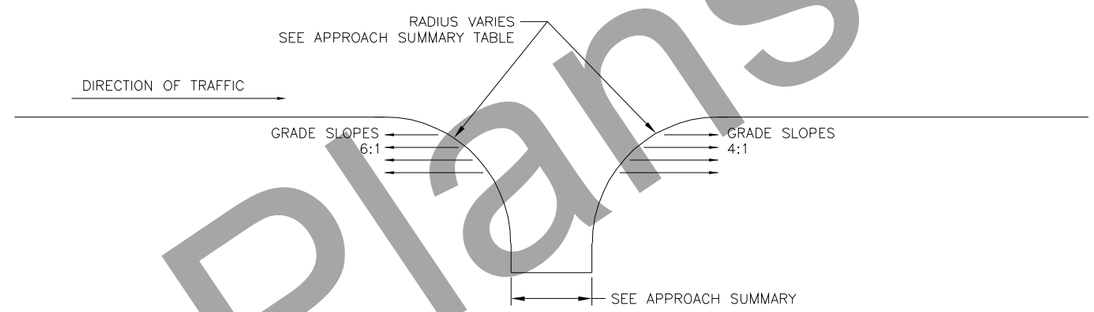

INTERSECTION DETAIL
APPROACH INTERSECTION

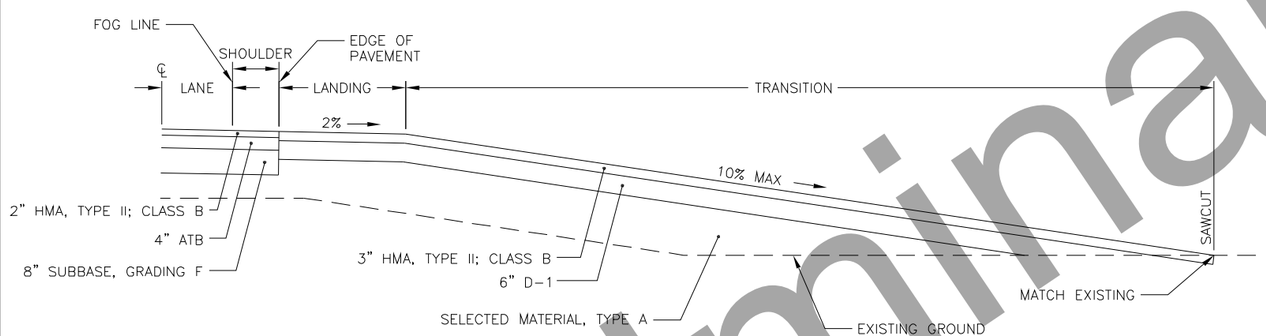

REST STOP APPROACH ELEVATION

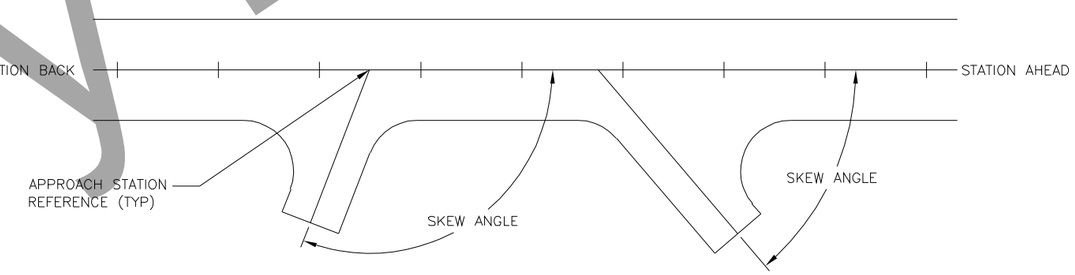

STATION REFERENCE DETAIL

DRIVEWAY NOTES

1. MATCH EXISTING EDGE OF APPROACH AND APPROXIMATE APPROACH LOCATION. TRANSITIONS, DIMENSIONS, AND LOCATIONS ARE LISTED IN THE APPROACH SUMMARY TABLE AND MAY BE FIELD ADJUSTED BY THE ENGINEER.
2. RE-GRADING APPROACH SLOPES IS SUBSIDIARY TO PAY ITEM 639.0002.0000 AND 639.0003.0000.
3. THE MAXIMUM ALGEBRAIC DIFFERENCE BETWEEN LANDING GRADE AND TRANSITION OF THE REST STOP IS NOT TO EXCEED 8%.
4. MATCH EXISTING EXTENTS OF PAVEMENT OF REST STOP APPROACHES.

639.0001.0000 – APPROACH SUMMARY

STATION	RT/LT	WIDTH	TYPE	RADIUS		LANDING	TRANSITION	TRANSITION SLOPE	PAVING	SKEW ANGLE
				AHD STA	BK STA					
1914+14	RT	14'	RESIDENTIAL	25'	30'	10'	100'	7.87%	22'	79'
1918+87	RT	14'	RESIDENTIAL	25'	35'	10'	110'	10.98%	29'	82'
1919+06	LT	14'	RESIDENTIAL	25'	25'	10'	100'	11.72%	30'	82'
1920+31	RT	55'	REST STOP	20'	150'	30'	130'	7.00%	--	90'
1926+95	RT	55'	REST STOP	150'	20'	30'	135'	7.00%	--	90'
1928+55	RT	14'	RESIDENTIAL	40'	20'	10'	150'	15.00%	26'	102'

APPROACHES

Preliminary Plans

PLANS DEVELOPED BY: MICHAEL BAKER INTERNATIONAL, AECC103, 3900 C STREET SUITE 900, ANCHORAGE, AK 99503 (907) 273-1600
T:\AKDOT\148830 - DOT&PF Parks 305-325 PI\04 CADD\LGS PS&E\60657_Approaches_LGS-APPROACHES Thu, Jul/23/20 11:52am

NO.	DATE	REVISION

STATE	PROJECT DESIGNATION	YEAR	SHEET NO.	TOTAL SHEETS
ALASKA	PENDING/NFHWY00476	2020	H1	H2

SIGNING SUMMARY

LOC. NO.	STATION	LOCATION LT.	LOCATION RT.	ASDS CODE	LEGEND	SIZE H X V (INCHES)	BRACING/FRAMING BRACED	BRACING/FRAMING FRAMED	AREA (SQ.FT.)	MTG. HGT. (FT.)	DIR.	POST TYPE	POST SIZE (INCHES)	POST NO.	REMARKS
1	1912+82		X		SCHOOL BUS STOP AHEAD						NE	PST	2.5	1	REMOVE AND RELOCATE
					NEXT 8 MILES (PLAQUE)										REMOVE AND RELOCATE
2	1914+65	X			ADOPT A HIGHWAY						SW	PST	2.5	1	REMOVE AND RELOCATE
					NENANA MESSENGER NEWS (PLAQUE)										REMOVE AND RELOCATE
					ADOPT A HIGHWAY						NE				REMOVE AND RELOCATE
					PARKS HIGHWAY SERVICE AND TOWING (PLAQUE)										REMOVE AND RELOCATE
3	1916+11		X		Little Goldstream Creek										REMOVE AND SALVAGE
4	1915+64		X	I-3	Little Goldstream Creek	42x30	X		8.75		NE	TS	3	1	REPLACE
5	1917+47	X			Little Goldstream Creek										REMOVE AND SALVAGE
				I-3	Little Goldstream Creek	42x30	X		8.75		SW	TS	3	1	REPLACE
6	1919+41		X		REST AREA →						NE	PST	2.5	1	REMOVE AND RELOCATE
7	1921+03		X		STOP		X				NW	PST	2.5	1	REMOVE AND RELOCATE
8	1921+03		X		TRUCK PARKING →						NW	PST	2.5	1	REMOVE AND RELOCATE
9	1921+03		X	SPECIAL	BUS AND RV PARKING →	12x18			1.5		NW	PST	2.5	1	REPLACE
10	1922+29		X		NO SHOOTING FROM ROADWAY						SE	PST	2.5	1	TO REMAIN
					BUS AND RV PARKING ←										TO REMAIN
11	1921+03		X		RESERVED PARKING WITH HANDICAP SYM						NW	PST	2.5	1	TO REMAIN
					VAN ACCESSIBLE										TO REMAIN
12	1924+88		X		NO SHOOTING FROM ROADWAY						SE	PST	2.5	1	TO REMAIN
					BUS AND RV PARKING →										TO REMAIN
13	1926+24		X		TRUCK PARKING ←						NW	PST	2.5	1	REMOVE AND RELOCATE
14	1926+24		X		BUS AND RV PARKING ←						NW	PST	2.5	1	REMOVE AND RELOCATE
15	1927+58		X		REST AREA ←						NW	PST	2.5	1	REMOVE AND RELOCATE
16	1927+58		X		STOP		X				NW	PST	2.5	1	REMOVE AND RELOCATE
								TOTAL	19.00	SF					

POST LEGEND

PST = PERFORATED STEEL TUBE

TS = TUBE STEEL (SQUARE STRUCTURAL STEEL TUBING)

FASTENER SPECIFICATION TABLE

FASTENERS	STEEL	STAINLESS STEEL
BOLTS	ASTM A 307	ASTM F 593
NUTS	ASTM A 563	ASTM F 594
WASHERS	ASTM F 844	ASTM A 480

THESE SPECIFICATIONS APPLY TO ALL SIGN FASTENER HARDWARE ON THE PROJECT.

I-3

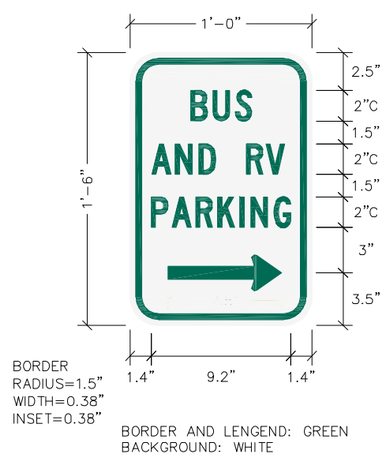

SPECIAL

SIGNING NOTES:

1. REMOVE AND DISPOSE OF ALL EXISTING SIGN PANELS, WIND BEAMS, ATTACHMENTS, SIGN FOUNDATIONS, SIGN POSTS WITHIN THE PROJECT LIMITS, UNLESS OTHERWISE NOTED.
2. OFFSET DISTANCES FOR SIGNS SHALL BE IN ACCORDANCE WITH THE STANDARD PLAN S-05.01, UNLESS OTHERWISE NOTED ON PLANS.
3. MOUNTING HEIGHTS ARE PER STANDARD PLAN S-0.5.01.
4. DETERMINE POST LENGTHS IN FIELD. DO NOT EXTEND POSTS ABOVE TOP OF SIGNS.
5. INSTALL POSTS WITH SLEEVE TYPE CONCRETE FOUNDATION PER STANDARD PLAN S-30.04. ATTACH THE SIGN POST USING GALVANIZED 3/8" BOLT, NUT, SPLIT LOCK WASHER AND TWO FLAT WASHERS.
6. INSTALL "TUBE POST BRACING" AS SHOWN ON STANDARD PLAN S-01.01 ON ALL SIGNS MOUNTED ON A SINGLE POST AND HAVING A HORIZONTAL DIMENSION OF 30 INCHES OR GREATER. INSTEAD OF 5/8" GALVANIZED BOLTS AND NYLON LOCKING NUTS SHOWN ON STANDARD PLAN S-01.01, USE GALVANIZED 3/8" BOLTS, SPLIT LOCK WASHERS AND NUTS. 1/4" X 1-1/2" ALUMINUM ALLOY 6061-T6 BAR MAY ALSO BE USED TO FABRICATE SIGN BRACES.
7. ATTACH ALL SIGNS TO THEIR SUPPORTS WITH 3/8" BOLTS, EXCEPT ATTACH UNFRAMED SIGNS TO PST POSTS WITH ALUMINUM DRIVE RIVETS. WIND WASHERS ARE NOT REQUIRED WITH DRIVE RIVETS. INCLUDE SPLIT LOCK WASHERS WHEN BOLTS ARE USED.
8. ALL FASTENER HARDWARE SHALL MEET THE REQUIREMENTS OF THE "FASTENER SPECIFICATION TABLE" SHOWN ON THIS SHEET.
9. MAINTAIN EXISTING SIGNS UNTIL NEW SIGNS ARE INSTALLED. DO NOT LEAVE DUPLICATE OR CONFLICTING SIGNING UP AT ANY TIME.
10. LOCATE AND PROTECT ALL NEW AND EXISTING UNDERGROUND UTILITIES, INCLUDING BUT NOT LIMITED TO: PIPELINES, INTERCONNECT CABLES, SIGNAL SYSTEMS, LIGHTING SYSTEMS, STORM AND SANITARY SEWERS, WATER SYSTEMS, AND TELEPHONE AND ELECTRICAL CABLES, PRIOR TO INSTALLING SIGN POSTS. NOT ALL EXISTING UTILITIES MAY BE SHOWN ON THE PLANS.
11. CLEARING MAY BE REQUIRED TO ENSURE ADEQUATE VISIBILITY OF SIGNS AS DIRECTED BY THE ENGINEER. THIS WORK IS SUBSIDIARY TO PAY ITEM 615(1).
12. INSTALL WEATHER TIGHT CAPS ON ALL PIPE AND TUBE POSTS, EXCEPT PERFORATED STEEL TUBE.
13. INSTALL TS SIGN POST BASES AND FOUNDATIONS BEHIND BARRIER IN ACCORDANCE WITH STANDARD PLAN S-32.00. PLACE SIGNS TO MEET 3' MINIMUM TO EDGE OF SIGN AND 5' MINIMUM TO SIGN POST FROM FACE OF GUARDRAIL.

Preliminary Plans

SIGNING SUMMARY

PLANS DEVELOPED BY: MICHAEL BAKER INTERNATIONAL, AECC103, 3900 C STREET SUITE 900, ANCHORAGE, AK 99503 (907) 273-1600
T:\AKDOT\148830 - DOT&PF Parks 305-325 PI\04 CADD\LGS PS&E\60657_Signing_LGS-SIGN SUMMARY Thu, Jul/23/20 02:38pm

NO.	DATE	REVISION

STATE	PROJECT DESIGNATION	YEAR	SHEET NO.	TOTAL SHEETS
ALASKA	PENDING/NFHWY00476	2020	H2	H2

PLAN VIEW KEY

(#) STATION
SIGN CODE(S)
SIGN LOCATION #

TRAFFIC MARKING KEY

4"W 4" SOLID WHITE LINE

4"DY 4" DOUBLE SOLID YELLOW LINE

NOTES:

1. DIMENSIONS ARE TO CENTER OF STRIPE OR STRIPE GROUP.
2. STRIPE 4" WHITE EDGELINE AND 4" DOUBLE YELLOW FROM BOP TO EOP. EDGELINE WILL BE OFFSET 12-FT FROM CENTERLINE. DOUBLE YELLOW WILL BE ON CENTERLINE.

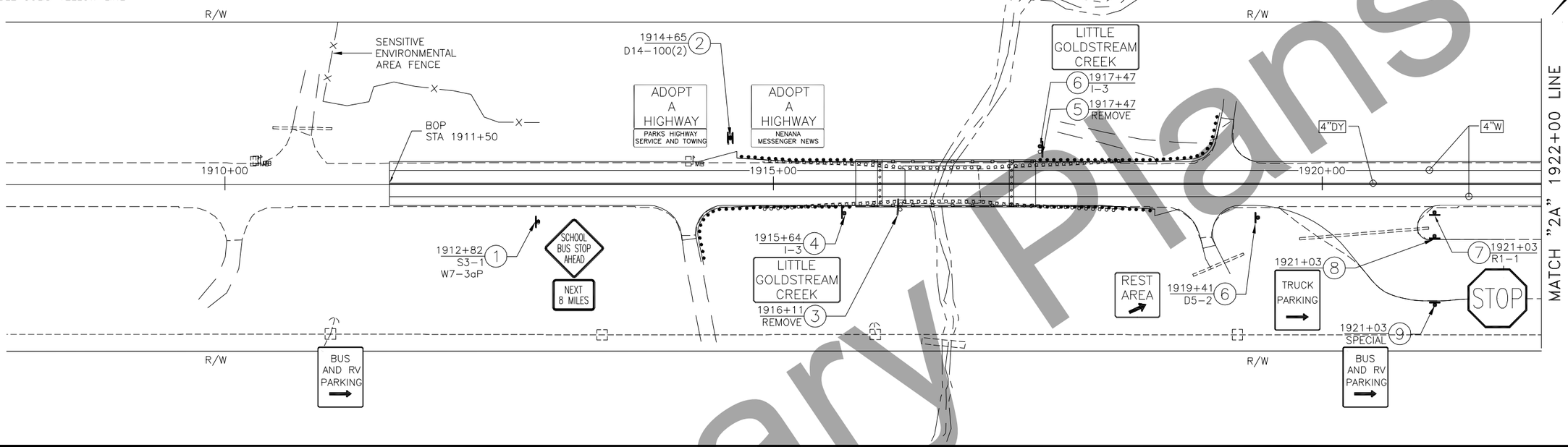

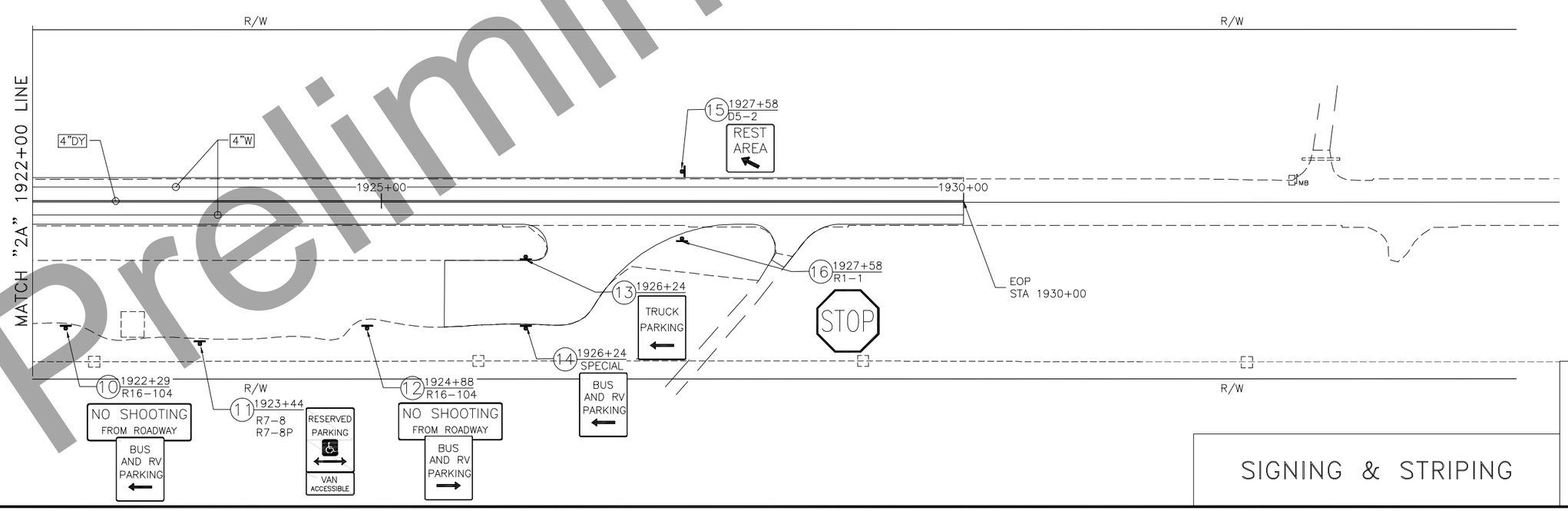

SIGNING & STRIPING

Preliminary Plans

PLANS DEVELOPED BY: MICHAEL BAKER INTERNATIONAL, AECC103, 3900 C STREET SUITE 900, ANCHORAGE, AK 99503 (907) 273-1600
T:\AKDOT\148830 - DOT&PF Parks 305-325 PI\04 CADD\LGS PS&E\60657_Sign & Stripe_LGS-SIGN & STRIPE Thu, Jul/23/20 02:38pm

STATE	PROJECT DESIGNATION	YEAR	SHEET NO.	TOTAL SHEETS
ALASKA	NFHWY00476	2020	N1	N21

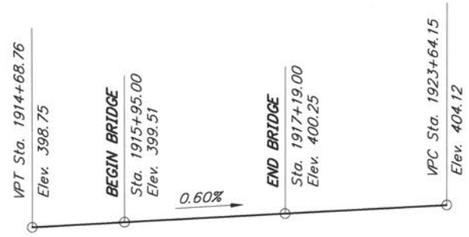

PROFILE GRADE DATA

No Scale

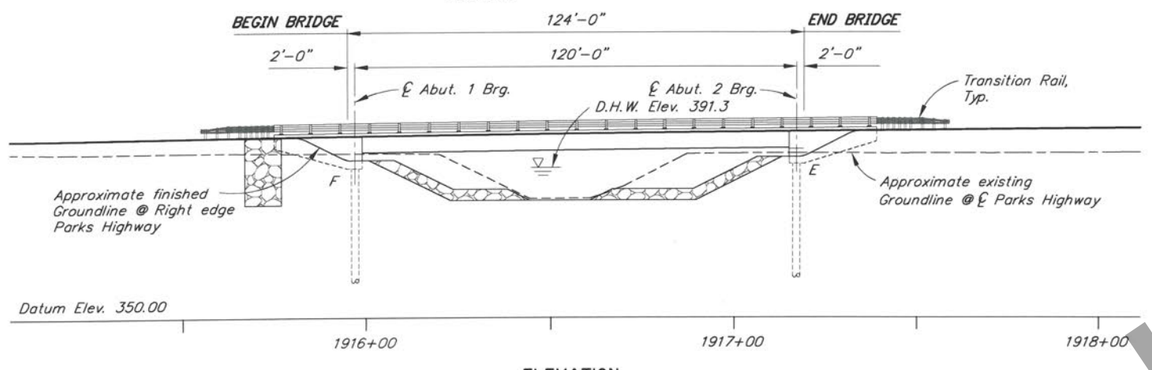

ELEVATION

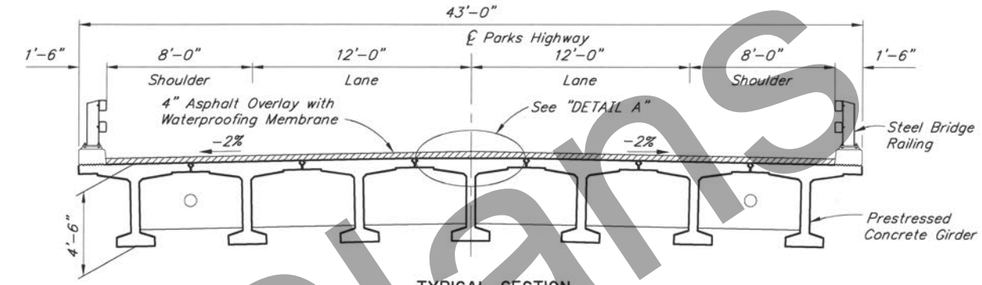

TYPICAL SECTION

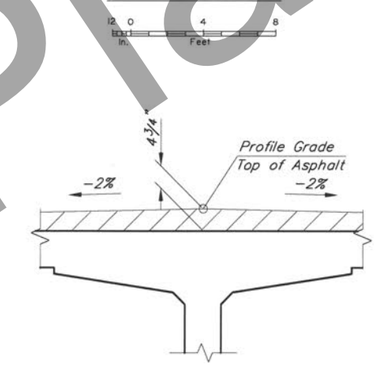

DETAIL A

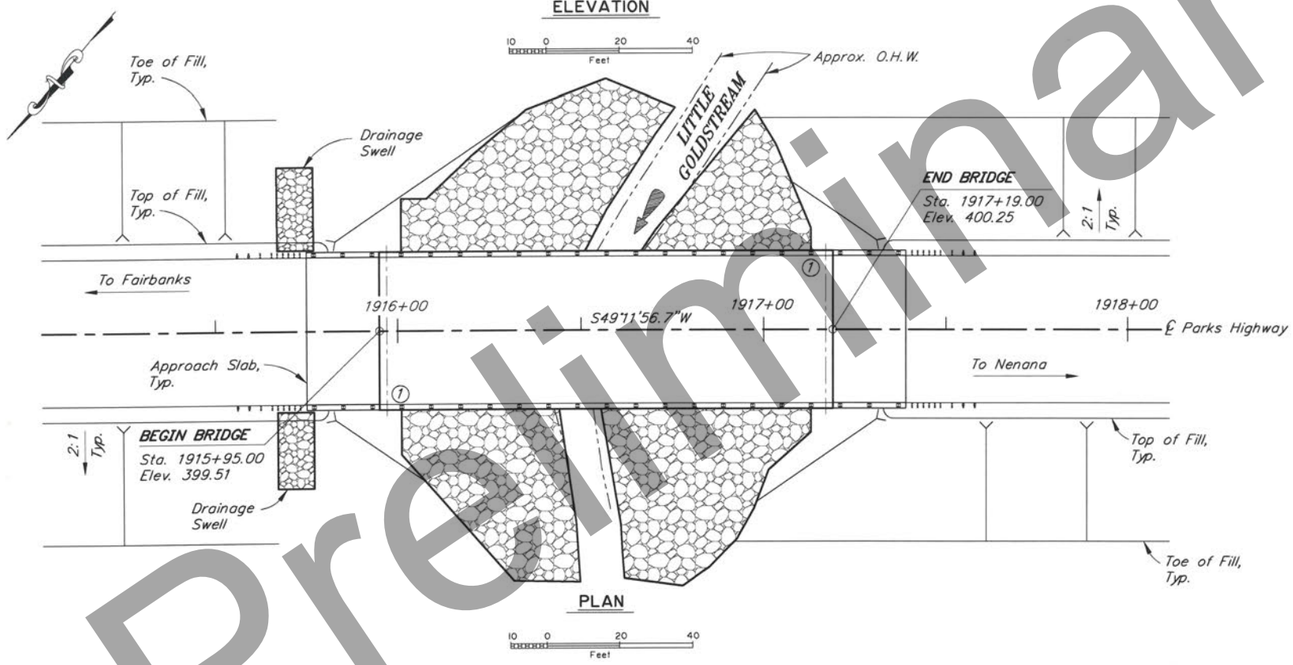

PLAN

DRAWING INDEX

TITLE	DWG. NO.
GENERAL LAYOUT	1
SITE PLAN	2
RIPRAP LAYOUT	3
RIPRAP DETAILS	4
ABUTMENT 1	5
ABUTMENT 2	6
ABUTMENT DETAILS	7
WINGWALLS	8
FRAMING PLAN AND TYPICAL SECTION	9
GIRDERS	10
GIRDER DETAILS	11
APPROACH SLAB	12
STEEL BRIDGE RAILING, 2-TUBE	13
THRIE BEAM TRANSITION, 2-TUBE	14
TEST HOLE & PENETROMETER LOCATION	15
TEST HOLE & PENETROMETER LOGS	16-21

NOTES

① Approximate location of Bridge Number Plate.

DESIGNED BY: Elmer Marx	CHECKED: Hannah Bailey	LAYOUT BY: Elmer Marx	CHECKED BY: Hannah Bailey
DRAWN BY: Sam Sollie	CHECKED: Elmer Marx	SPECIFICATIONS BY: Elmer Marx	P S & E COMPARED: Hannah Bailey
QUANTITIES BY: Elmer Marx	CHECKED: Hannah Bailey	APPROVAL RECOMMENDED BY: Rich Pratt	

STATE OF ALASKA
DEPARTMENT OF TRANSPORTATION AND PUBLIC FACILITIES
BRIDGE SECTION
3132 Channel Drive
Juneau, Alaska 99801
907-465-2975

LITTLE GOLDSTREAM BRIDGE

PARKS HIGHWAY

GENERAL LAYOUT

BRIDGE NO. 678

DWG. NO. 1

R:\cad\678\678-GENERAL LAYOUT Thu, Jul/02/20 1:38pm

Preliminary Plans

STATE	PROJECT DESIGNATION	YEAR	SHEET NO.	TOTAL SHEETS
ALASKA	NFHWY00476	2020	N2	N21

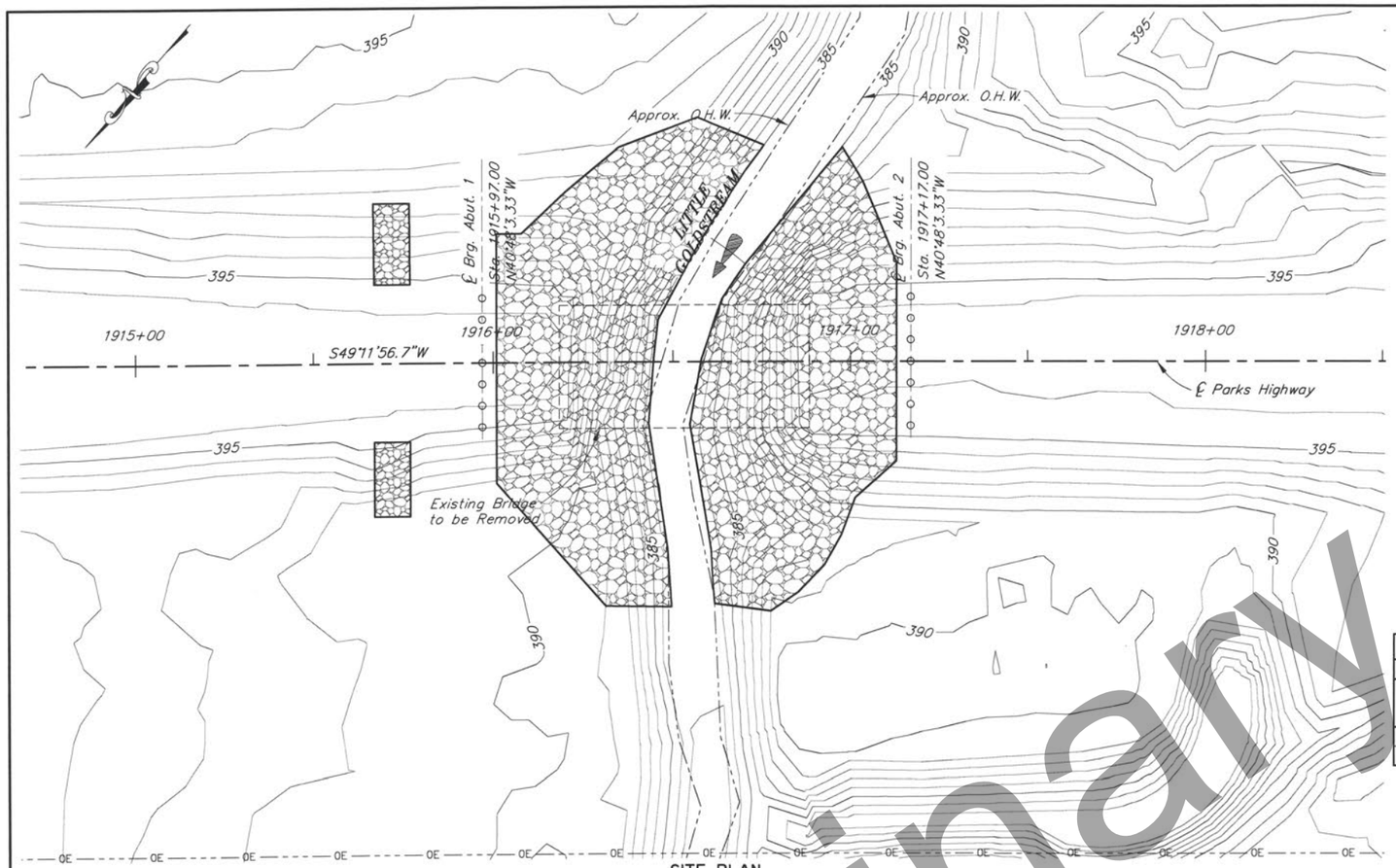

SITE PLAN

10 0 20 40
Feet

GENERAL NOTES

DESIGN:..... AASHTO LRFD Bridge Design Specifications, 2020 Edition, with latest interim specifications.

Seismic design per AASHTO Guide Specifications for LRFD Seismic Bridge Design, 2011 with latest interim revisions.

LIVE LOAD:..... HL-93

DEAD LOAD:..... Includes 50 psf for all wearing surfaces.

SEISMIC PARAMETERS:..... PGA = 0.27
S_S = 0.63
S_1 = 0.21
Site Class = E
Liquefaction Potential = High
AASHTO 7% probability of exceedance in 75 years.

REINFORCEMENT:..... ASTM A706, Grade 60, Fy = 60,000 psi
ASTM A970 Headed bars, Class HA.
Space reinforcement evenly unless otherwise noted.

PRESTRESSED CONCRETE:..... See Girder Drawings.

CONCRETE:..... Class A Concrete unless otherwise noted, f'c = 4000 psi

STRUCTURAL STEEL:..... ASTM A709, Grade 36T3, Fy = 36,000 psi
Galvanize structural steel in accordance with AASHTO M111 unless shown otherwise.

STRUCTURAL STEEL PILING:..... API 5L X52 PSL2, Fy = 52,000 psi or
ASTM A709 Grade 50T3 Fy=50,000 psi
Closed-Ended Pile Tip reinforcing is required.

PILE DATA TABLE

LOCATION	PILE TYPE	DRIVING CRITERIA: MINIMUM PENETRATION (ft)	DRIVING CRITERIA: ESTIMATED PILE TIP ELEVATION (ft)	DRIVING CRITERIA: DRIVING RESISTANCE (K)	DESIGN DATA: STRENGTH I FACTORED LOAD (K)	DESIGN DATA: NOMINAL RESISTANCE (K)	DESIGN DATA: RESISTANCE FACTOR, Φ
Abutment 1	2'-0"øx1/2" Pile	112	274	570	370	570	0.65
Abutment 2	2'-0"øx1/2" Pile	112	270	570	370	570	0.65

ESTIMATE OF QUANTITIES

ITEM NO.	ITEM	PAY UNIT	ESTIMATING UNIT	SUBST.	SUPERST.	TOTAL QUANTITY
202.0023.0000	Removal of Bridge	LS	SF	All Req'd	All Req'd	All Req'd
203.0003.0000	Unclassified Excavation	CY	CY	3,155	---	3,155
205.0006.0000	Structural Fill	CY	CY	1,205	---	1,205
501.0001.0000	Class A Concrete	LS	CY	256.9	117.8	374.7
501.0007.0000	Precast Concrete Member, 122'-6" Decked Bulb-Tee	EA	EA	---	7	7
503.0001.0000	Reinforcing Steel	LS	LBS	30,240	---	30,240
503.0002.0000	Epoxy-Coated Reinforcing Steel	LS	LBS	---	20,215	20,215
505.0005.2405	Furnish Structural Steel Piles, 2'-0" Dia. x 1/2" Pipe	LF	LF	1,653	---	1,653
505.0006.2405	Drive Structural Steel Piles, 2'-0" Dia. x 1/2" Pipe	EA	EA	14	---	14
507.0001.0002	Steel Bridge Railing, 2-Tube	LF	LF	---	328.0	328.0
508.0001.0000	Waterproofing Membrane, Spray-Applied	LS	SF	---	6,560	6,560
520.0001.0000	Temporary Crossings	LS	LS	All Req'd	All Req'd	All Req'd
606.0016.0000	Transition Rail	EA	EA	---	4	4
611.0001.0001	Riprap, Class I	CY	CY	20	---	20
611.0001.0002	Riprap, Class II	CY	CY	1,330	---	1,330
631.0002.0001	Geotextile, Erosion Control, Class 1	SY	SY	145	---	145

Item numbers are for reference only. Quantities shown are not necessarily the pay quantities nor the total quantity of the particular item.

ABBREVIATIONS:

℄	= centerline	EA	= each	min.	= minimum
ℙ	= plate	Elev.	= elevation	MSE	= mechanically stabilized earth
&	= and	e.f.	= each face	n.f.	= near face
@	= at	e.w.	= each way	No.	= number
ø	= diameter	Ext.	= exterior	o.c.	= on center
±	= approximate	F	= fixed	O.H.W.	= ordinary high water
AASHTO	= American Association of State Highway and Transportation Officials	f.f.	= front/air face	OE	= overhead electrical line
		f'c	= specified concrete compressive strength	pcf	= pounds per cubic foot
ASTM	= American Society for Testing and Materials			psf	= pounds per square foot
		f'ci	= specified concrete compressive strength at release	psi	= pounds per square inch
Abut.	= abutment			R	= radius
Approx.	= approximate			R.O.W.	= right of way
b.f.	= back/dirt face	Ft.	= feet	RT.	= right
bot.	= bottom	Fy	= yield stress	Rd.	= road
Br.	= bridge	Glov.	= galvanize	spcs.	= space, spaces
btwn.	= between	H.S.	= high strength	Sta.	= station
Brg.	= bearings	Hwy.	= highway	SF	= square feet
C.G.	= center of gravity	ID	= internal diameter	SY	= Square yard
C.I.P.	= cast in place	Int.	= interior	Std.	= standard
CJP	= complete joint penetration	Jt.	= joint	Symm.	= symmetric
Clr.	= clear, clearance	K	= kips	Typ.	= typical
CMP	= corrugated metal pipe	ksf	= 1000 pounds per square foot	UT	= ultrasonic testing
CY	= cubic yard	ksi	= 1000 pounds per square inch	VPT	= vertical point of tangent
Dia.	= diameter	LBS or lb	= pounds	VPC	= vertical point of curve
Dwg.	= drawing	LF	= linear foot	w/	= with
E	= expansion	LS	= lump sum		
(E)	= existing	LT.	= left		
		max.	= maximum		

DESIGNED BY: Elmer Marx	CHECKED: Hannah Bailey	FOUNDATIONS REVIEWED BY: Dave Hemstreet	STATE OF ALASKA DEPARTMENT OF TRANSPORTATION AND PUBLIC FACILITIES BRIDGE SECTION 3132 Channel Drive Juneau, Alaska 99801 907-465-2975
DRAWN BY: Sam Sollie	CHECKED: Elmer Marx		
QUANTITIES BY: Elmer Marx	CHECKED: Hannah Bailey		

STRUCTURAL

LITTLE GOLDSTREAM BRIDGE

PARKS HIGHWAY

SITE PLAN

BRIDGE NO. 678

DWG. NO. 2

R:\cad\678\678-SITE PLAN Thu, Jul/02/20 10:44am

Preliminary Plans

STATE	PROJECT DESIGNATION	YEAR	SHEET NO.	TOTAL SHEETS
ALASKA	NFHWY00476	2020	N3	N21

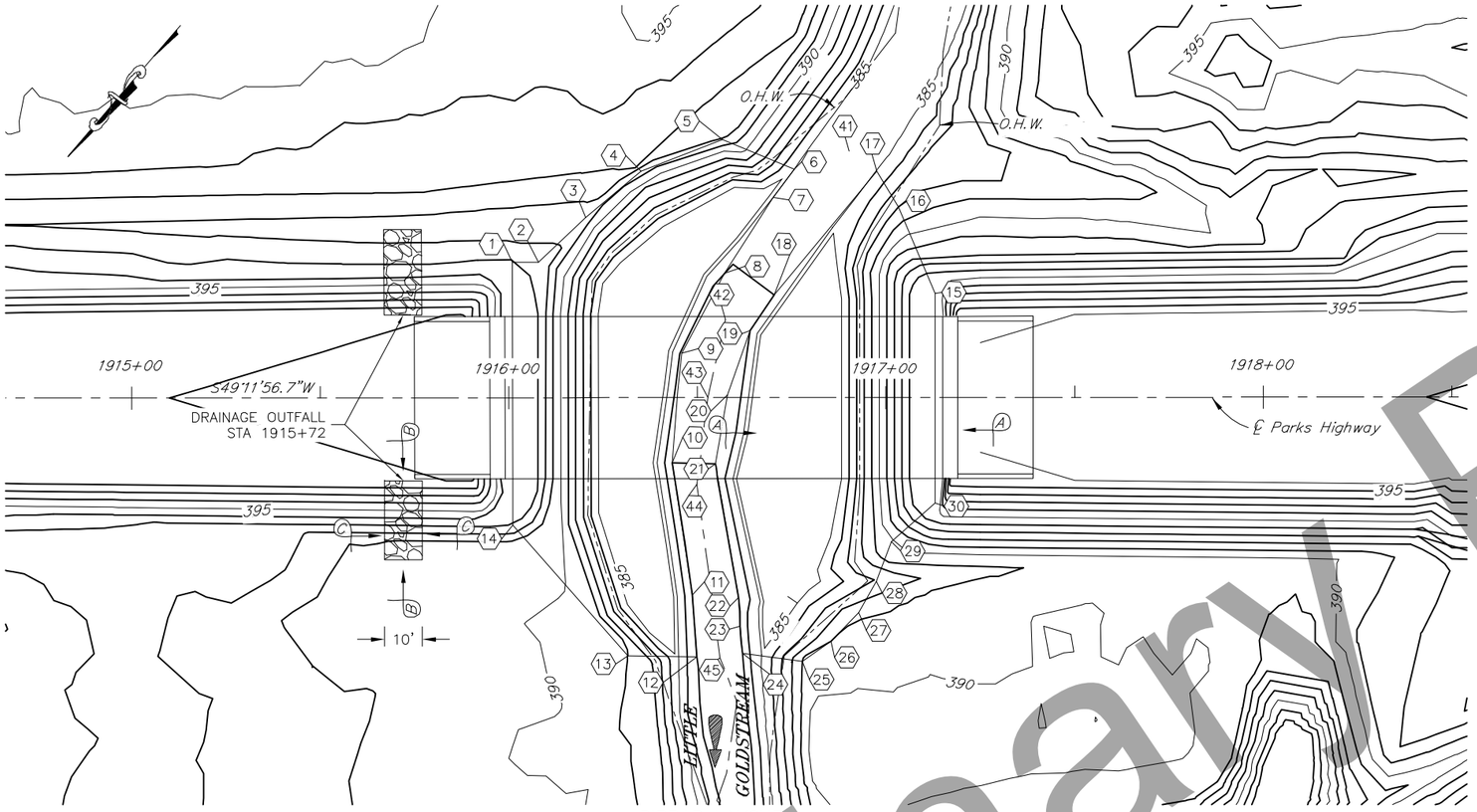

RIPRAP LAYOUT

10 0 20 40
Feet

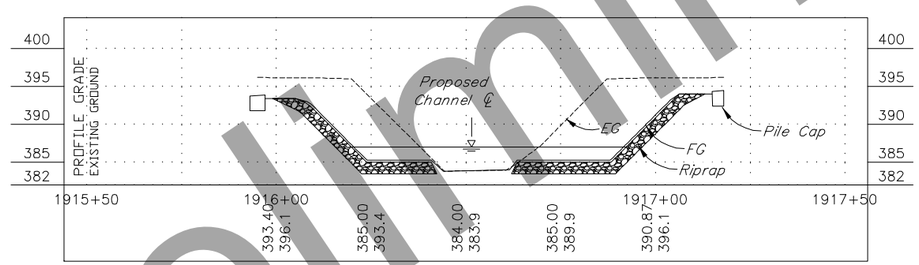

RIPRAP PROFILE AT HIGHWAY CENTERLINE

10 0 20 40
Feet

RIPRAP TABLE			
POINT	STATION	OFFSET	ELEVATION
1	1916+01.00	36.0 LT	393.1
2	1916+07.91	36.0 LT	392.3
3	1916+20.39	47.8 LT	391.3
4	1916+35.06	60.1 LT	391.6
5	1916+56.73	68.4 LT	391.8
6	1916+75.67	60.6 LT	384.5
7	1916+70.12	53.1 LT	384.5
8	1916+57.10	32.9 LT	383.5
9	1916+45.90	11.7 LT	383.5
10	1916+43.32	17.3 RT	382.5
11	1916+48.61	52.4 RT	382.5
12	1916+49.72	68.7 RT	382.5
13	1916+31.49	68.4 RT	389.0
14	1916+01.00	33.8 RT	393.0
15	1917+13.00	27.6 LT	394.0

RIPRAP TABLE			
POINT	STATION	OFFSET	ELEVATION
16	1917+03.38	50.5 LT	388.0
17	1916+97.55	60.0 LT	384.5
18	1916+70.39	27.2 LT	383.5
19	1916+68.65	17.3 LT	383.5
20	1916+57.94	0.7 LT	383.5
21	1916+54.78	17.5 RT	382.5
22	1916+60.83	53.0 RT	382.5
23	1916+61.25	60.6 RT	382.5
24	1916+61.84	67.7 RT	382.5
25	1916+77.73	69.9 RT	389.0
26	1916+85.31	64.7 RT	389.0
27	1916+92.74	57.0 RT	388.6
28	1916+97.41	48.7 RT	387.2
29	1917+01.40	38.2 RT	389.9
30	1917+13.00	28.0 RT	394.0

Riprap elevations are at top of riprap

STREAM CENTERLINE TABLE			
POINT	STATION	OFFSET	ELEVATION
41	1916+90.26	65.3 LT	384.5
42	1916+57.48	20.7 LT	383.7
43	1916+52.71	0.0 RT	383.3
44	1916+49.88	23.0 LT	382.8
45	1916+55.95	69.0 LT	382.5

Hydraulic & Hydrologic Summary, Bridge No. 678			
Flood Frequencey (yr.)	50	100	500
Exceedance Probability (%)	2	1	0.2
Discharge (CFS)	1,317	1,555	2,162
Water Surface Elevation (ft)	391.3	392.2	393.4
Anticipated Add'l Backwater (ft)	−2.0	−2.6	−3.0
Contraction Scour (ft)	0	0	0
Abutment Scour (ft)	0	0	0
Pier Scour (ft)	N/A	N/A	N/A
Long−term Degradation (ft)	2.7	3.2	3.9

Drainage Area: 41.7 square miles
Water surface elevations above are based upon ice−free conditions.
The hydraulic capacity is approximately 4,600 cfs.

Preliminary Plans

DESIGNED BY: R. HEBNES	CHECKED: A. SMITH		
DRAWN BY: R. HEBNES	CHECKED: A.SMITH		
QUANTITIES BY: R.HEBNES	CHECKED: A. SMITH		

STATE OF ALASKA
DEPARTMENT OF TRANSPORTATION
AND PUBLIC FACILITIES
BRIDGE SECTION
3132 Channel Drive
Juneau, Alaska 99801
907−465−2975

LITTLE GOLDSTREAM BRIDGE
PARKS HIGHWAY
RIPRAP LAYOUT

BRIDGE NO. 678
DWG. NO. 3

PLANS DEVELOPED BY: MICHAEL BAKER INTERNATIONAL, AECC103, 3900 C STREET SUITE 900, ANCHORAGE, AK 99503 (907) 273−1600
T:\AKDOT\148830 − DOT&PF Parks 305−325 PI\04 CADD\LGS PS&E\60657_Riprap−RIPRAP LAYOUT Thu, Jul/23/20 11:53am

STATE	PROJECT DESIGNATION	YEAR	SHEET NO.	TOTAL SHEETS
ALASKA	NFHWY00476	2020	N4	N21

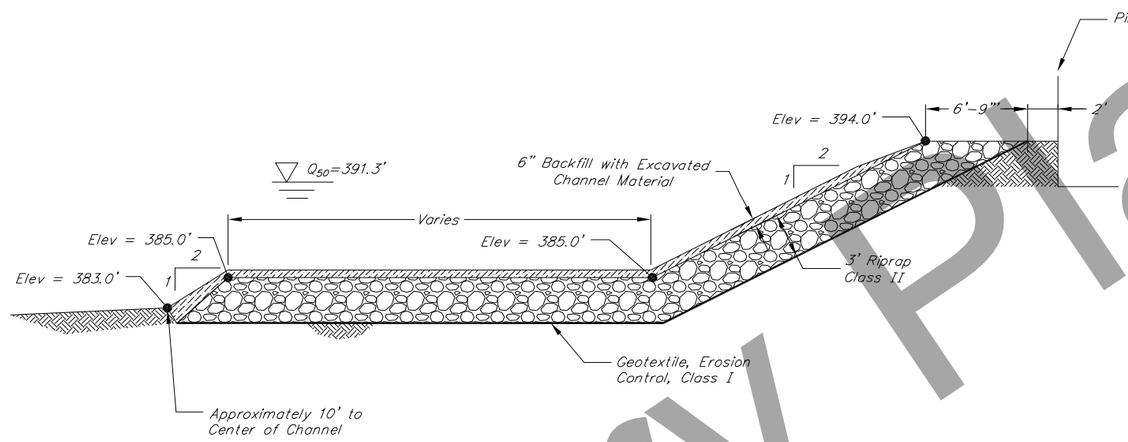

A-A RIPRAP DETAIL

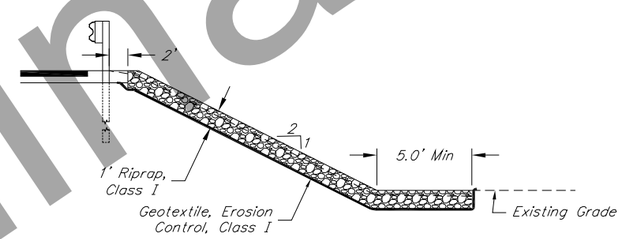

DRAINAGE OUTFALL CROSS-SECTION B-B

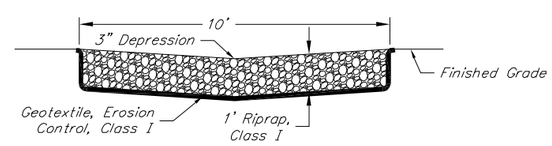

DRAINAGE OUTFALL SECTION C-C

Preliminary Plans

DESIGNED BY: R. HEBNES	CHECKED: A. SMITH	STATE OF ALASKA DEPARTMENT OF TRANSPORTATION AND PUBLIC FACILITIES BRIDGE SECTION 3132 Channel Drive Juneau, Alaska 99801 907-465-2975	LITTLE GOLDSTREAM BRIDGE PARKS HIGHWAY RIPRAP DETAILS
DRAWN BY: R. HEBNES	CHECKED: A. SMITH		BRIDGE NO. 678
QUANTITIES BY: R. HEBNES	CHECKED: A. SMITH		DWG. NO. 4

PLANS DEVELOPED BY: MICHAEL BAKER INTERNATIONAL, AECC103, 3900 C STREET SUITE 900, ANCHORAGE, AK 99503 (907) 273-1600
T:\AKDOT\148830 - DOT&PF Parks 305-325 PI\04 CADD\LGS PS&E\60657_Riprap-RIPRAP DETAILS Thu, Jul/23/20 11:53am

STATE	PROJECT DESIGNATION	YEAR	SHEET NO.	TOTAL SHEETS
ALASKA	NFHWY00476	2020	N5	N21

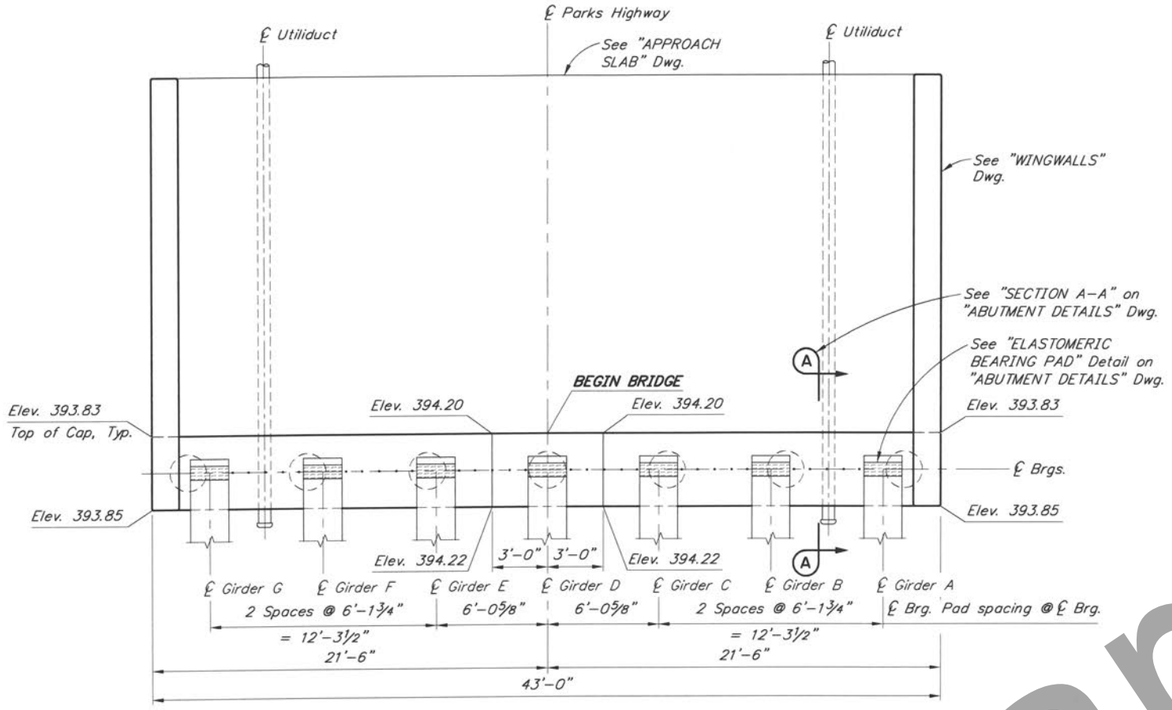

PLAN

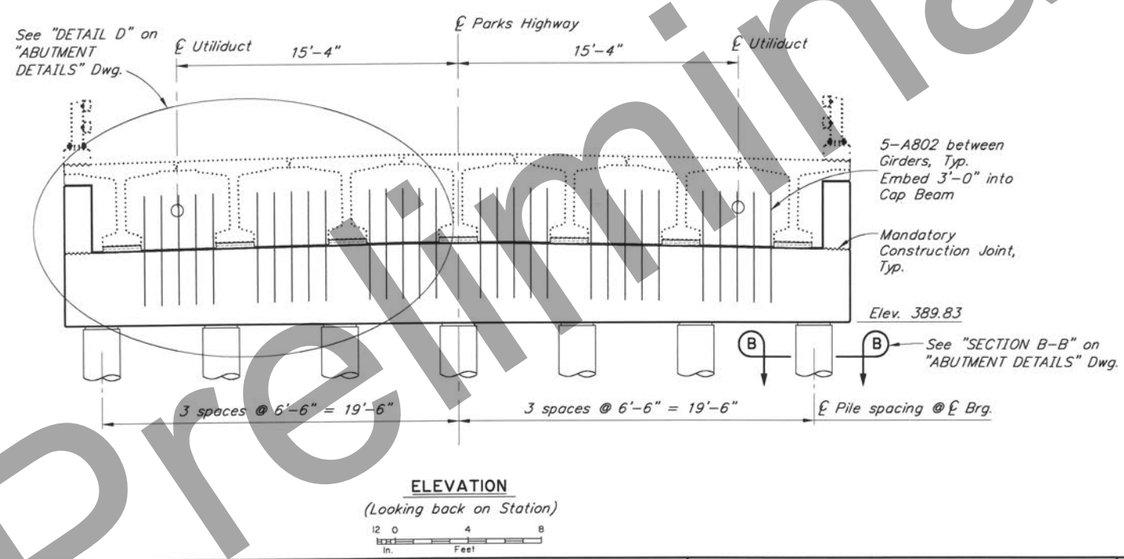

ELEVATION
(Looking back on Station)

REINFORCING STEEL - ABUTMENT 1

MARK	NOTE	SIZE	NO.	LENGTH	TYPE	BENDING DIAGRAM
A401	S	4	7	286'–8"	SPIRAL	1½ Turns Top & Bottom; 1'–7"; 6'–0"; 3" Pitch; 30'–0"; 1'–0" Pitch; A401
A402		4	136	VARIES	STIRRUP	
A403		4	49	6'–0"	HOOP	
A404		4	70	4'–8"	BENT	
A501	E	5	50	16'–9"	STIRRUP	
A601	S	6	10	42'–8"	---	
A602	E,M	6	8	39'–6"	---	
A603	E,M,S	6	7	42'–8"	---	
A701	E	7	8	3'–0"	BENT	
A801		8	56	40'–0"	---	
A802		8	30	6'–0"	---	
A1001	H,M,S	10	14	42'–8"	HEADED	

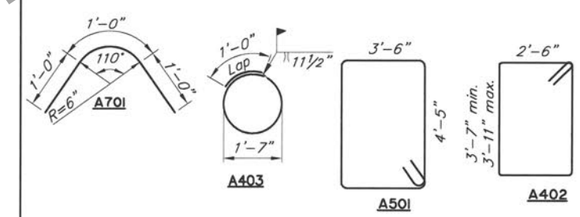

E – Epoxy–Coated
H – Headed reinforcing steel
M – Field adjust to match cross slope
S – Splice permitted. Splice length not included

DESIGNED BY: Elmer Marx	CHECKED: Hannah Bailey
DRAWN BY: Sam Sollie	CHECKED: Elmer Marx
QUANTITIES BY: Elmer Marx	CHECKED: Hannah Bailey

STATE OF ALASKA
DEPARTMENT OF TRANSPORTATION AND PUBLIC FACILITIES
BRIDGE SECTION
3132 Channel Drive
Juneau, Alaska 99801
907–465–2975

LITTLE GOLDSTREAM BRIDGE

PARKS HIGHWAY

ABUTMENT 1

BRIDGE NO. 678
DWG. NO. 5

R:\cad\678\678–1–ABUT 1 Thu, Jul/02/20 10:43am

Preliminary Plans

STATE	PROJECT DESIGNATION	YEAR	SHEET NO.	TOTAL SHEETS
ALASKA	NFHWY00476	2020	N6	N21

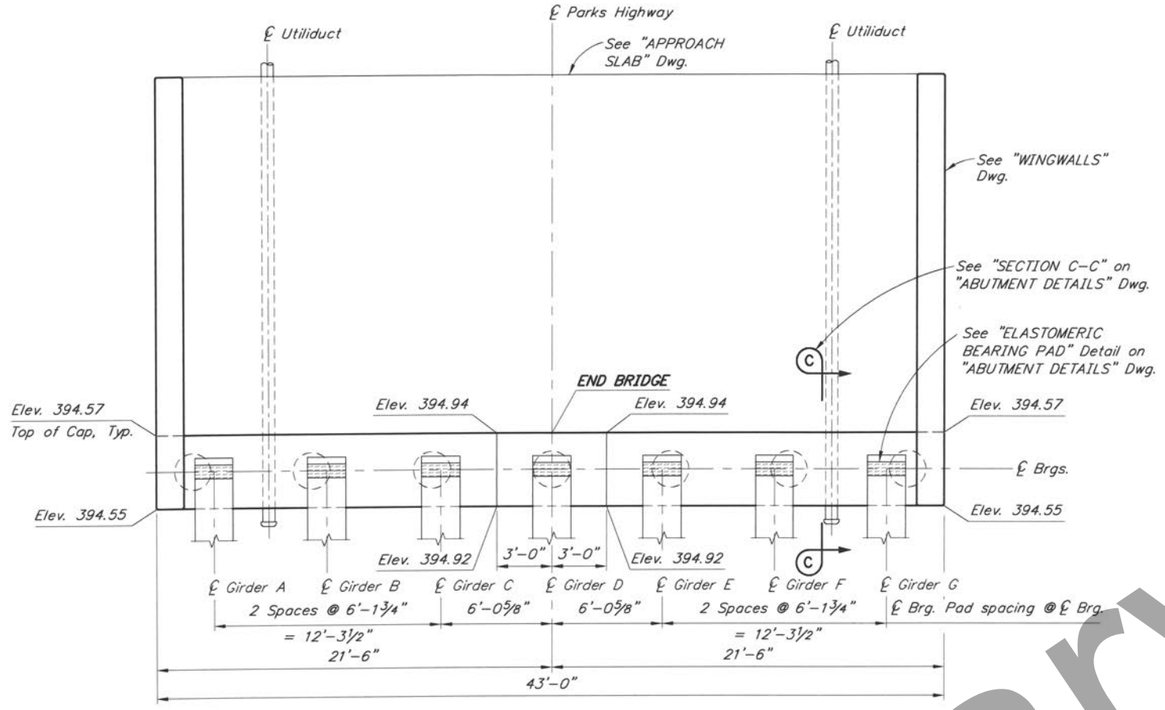

PLAN

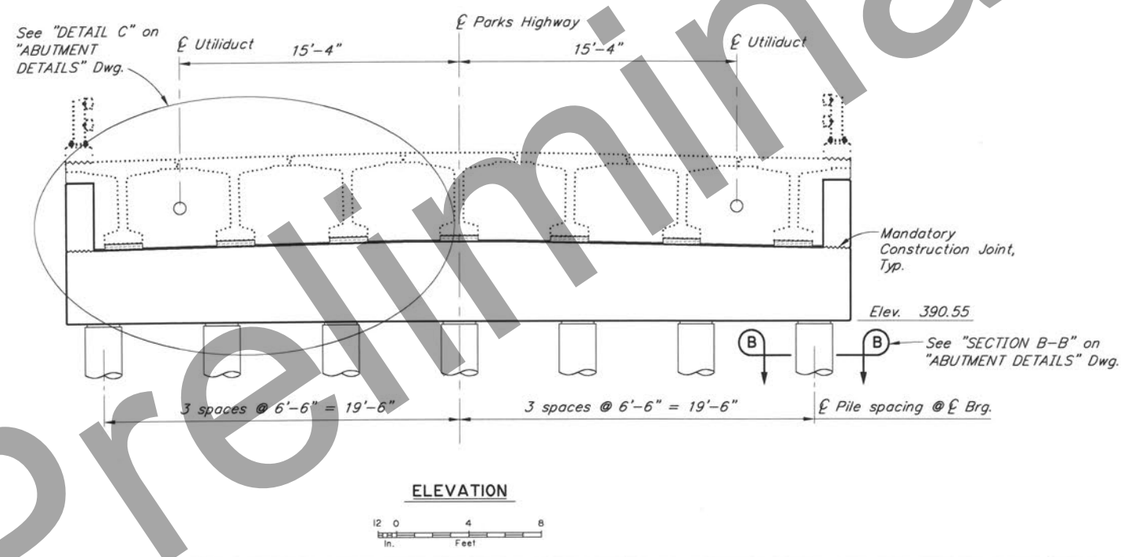

ELEVATION

REINFORCING STEEL - ABUTMENT 2

MARK	NOTE	SIZE	NO.	LENGTH	TYPE	BENDING DIAGRAM
A401	S	4	7	286'–8"	SPIRAL	1½ Turns Top & Bottom
A402		4	136	VARIES	STIRRUP	
A403		4	49	6'–0"	HOOP	
A404		4	70	4'–8"	BENT	
A501	E	5	50	16'–9"	STIRRUP	
A601	S	6	10	42'–8"	---	
A602	E,M	6	8	39'–6"	---	
A603	E,M,S	6	7	42'–8"	---	
A701	E	7	8	3'–0"	BENT	
A801		8	56	40'–0"	---	
A1001	H,M,S	10	14	42'–8"	HEADED	

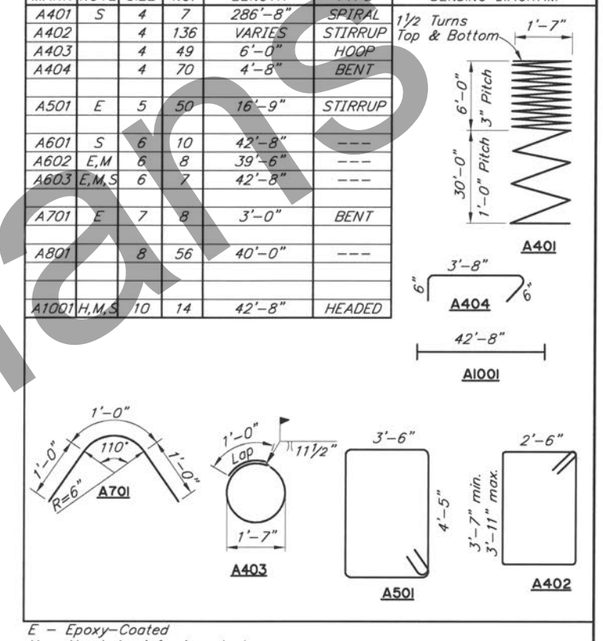

E – Epoxy–Coated
H – Headed reinforcing steel
M – Field adjust to match cross slope
S – Splice permitted. Splice length not included

DESIGNED BY: Elmer Marx	CHECKED: Hannah Bailey
DRAWN BY: Sam Sollie	CHECKED: Elmer Marx
QUANTITIES BY: Elmer Marx	CHECKED: Hannah Bailey

STATE OF ALASKA
DEPARTMENT OF TRANSPORTATION AND PUBLIC FACILITIES
BRIDGE SECTION
3132 Channel Drive
Juneau, Alaska 99801
907–465–2975

LICENSED STRUCTURAL ENGINEER

LITTLE GOLDSTREAM BRIDGE

PARKS HIGHWAY

ABUTMENT 2

BRIDGE NO. 678
DWG. NO. 6

R:\cad\678\678-1-ABUT 2 Thu, Jul/02/20 10:43am

Preliminary Plans

STATE	PROJECT DESIGNATION	YEAR	SHEET NO.	TOTAL SHEETS
ALASKA	NFHWY00476	2020	N7	N21

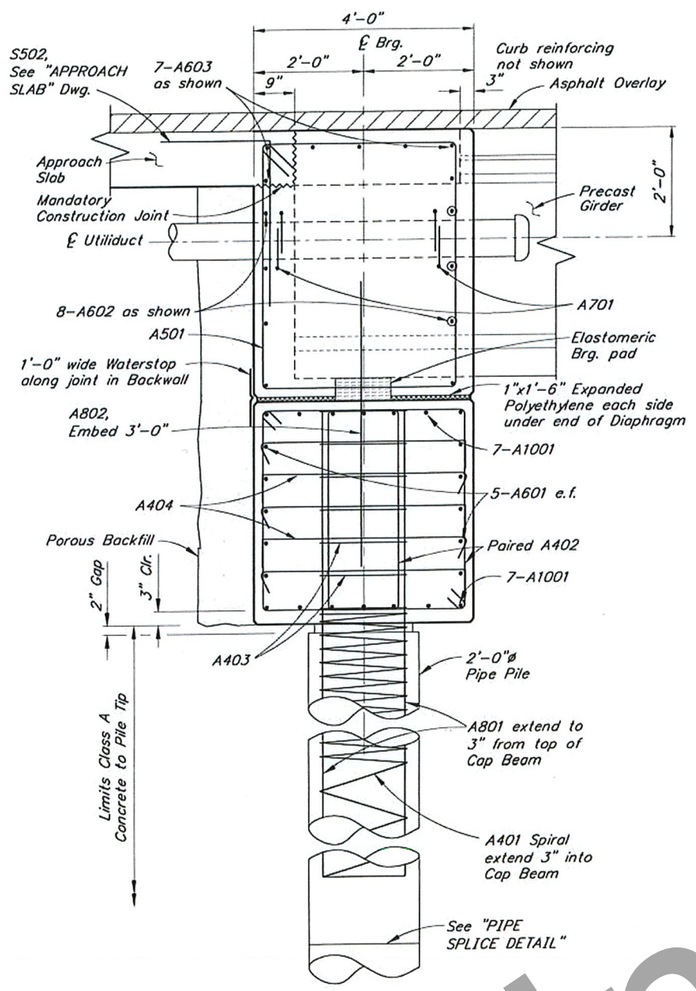

SECTION A-A

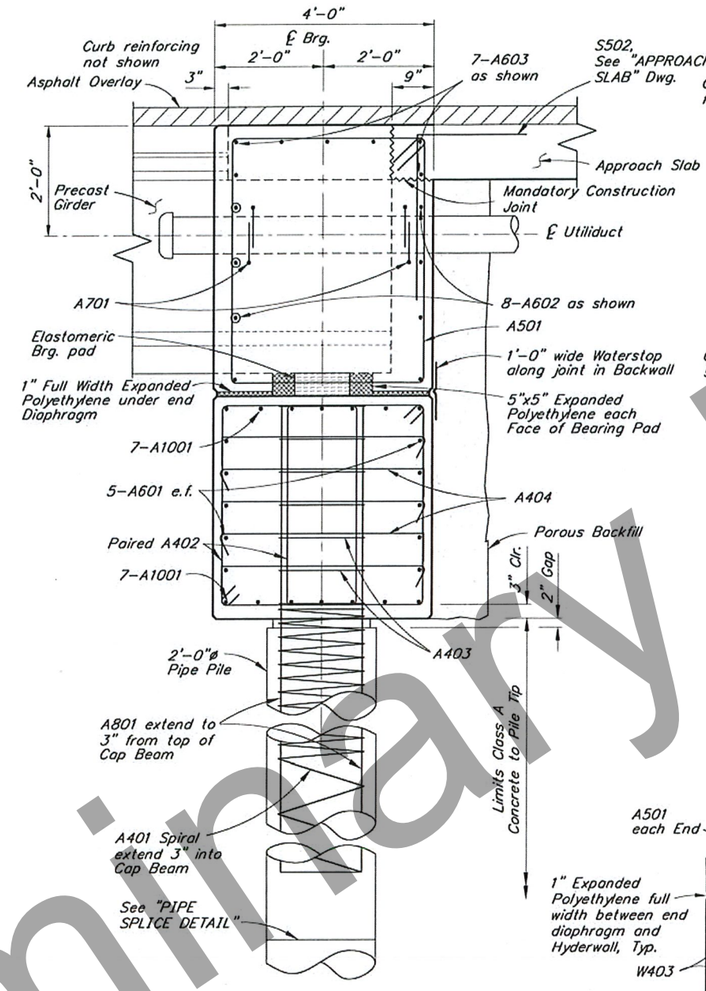

SECTION C-C

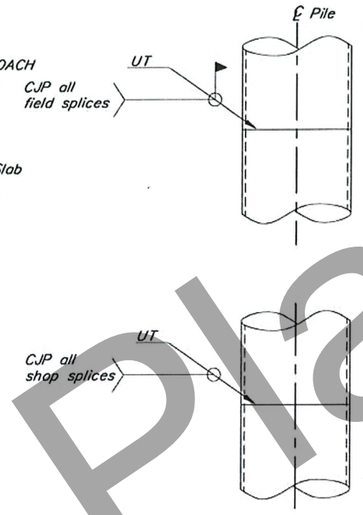

PIPE SPLICE DETAIL

No Scale

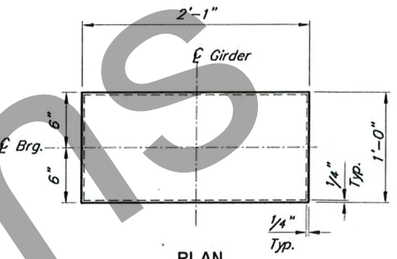

PLAN

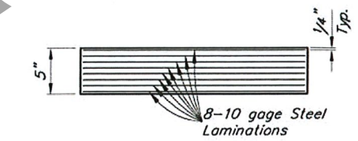

ELEVATION

ELASTOMERIC BEARING PAD

Grade 5
Max. Dead Load = 100 k
Max. Live Load = 77 k
Shear Modulus = 115 psi

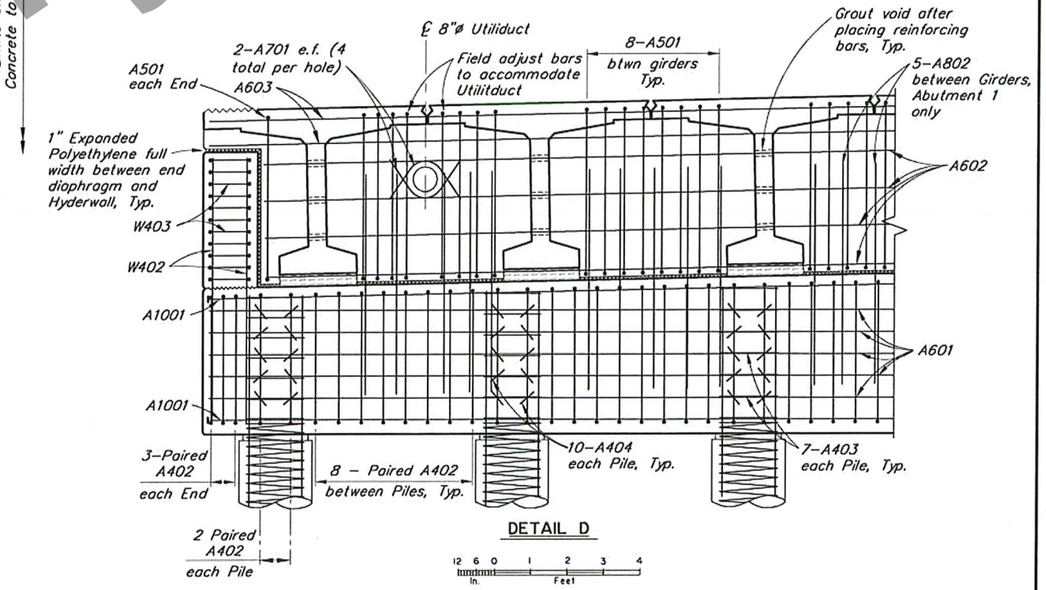

DETAIL D

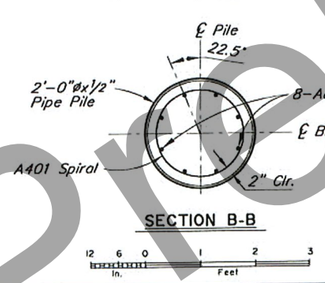

SECTION B-B

DESIGNED BY: Elmer Marx	CHECKED: Hannah Bailey	
DRAWN BY: Sam Sollie	CHECKED: Elmer Marx	
QUANTITIES BY: Elmer Marx	CHECKED: Hannah Bailey	

STATE OF ALASKA
DEPARTMENT OF TRANSPORTATION AND PUBLIC FACILITIES
BRIDGE SECTION
3132 Channel Drive
Juneau, Alaska 99801
907-465-2975

LITTLE GOLDSTREAM BRIDGE

PARKS HIGHWAY

ABUTMENT DETAILS

BRIDGE NO. 678

DWG. NO. 7

Preliminary Plans

R:\cad\678\678-1-ABUT 2 (2) Thu, Jul/02/20 10:43am

STATE	PROJECT DESIGNATION	YEAR	SHEET NO.	TOTAL SHEETS
ALASKA	NFHWY00476	2020	N8	N21

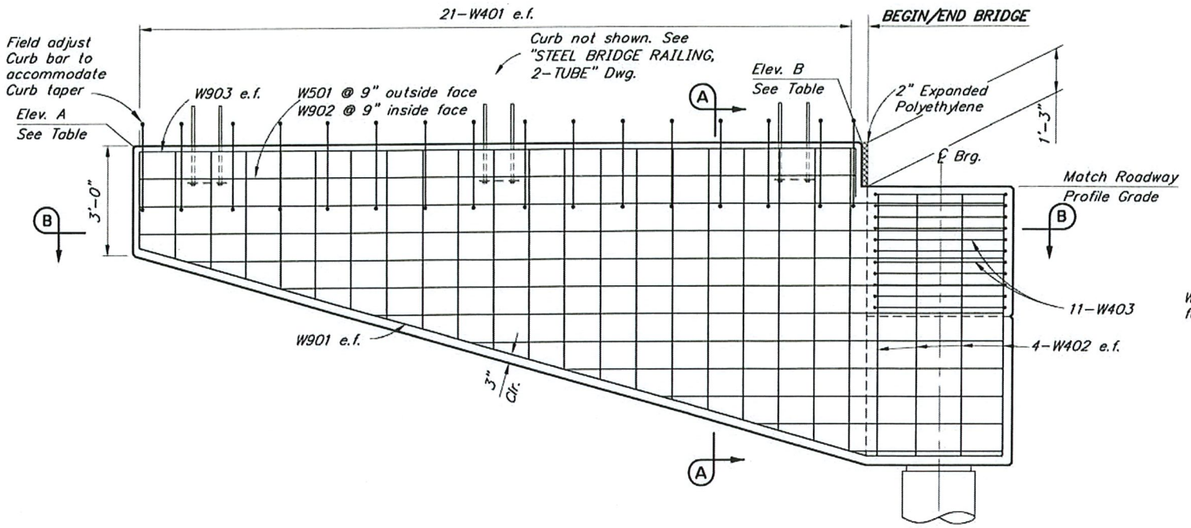

ELEVATION

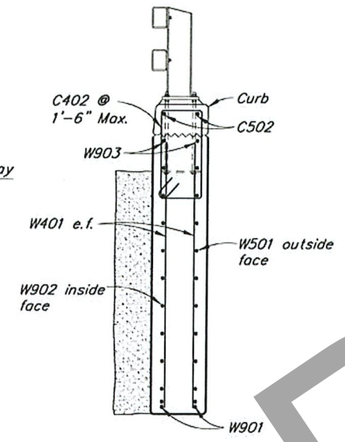

SECTION A-A

REINFORCING STEEL - ONE ABUTMENT

MARK	NOTE	SIZE	NO.	LENGTH	TYPE	BENDING DIAGRAM
W401		4	84	VARIES	---	
W402		4	16	7'-3"	---	
W403		4	22	10'-3"	STIRRUP	
W501		5	22	VARIES	---	
W901		9	4	24'-6"	BENT	
W902		9	22	VARIES	---	
W903		9	4	21'-6"	BENT	
C402	E	4	32	7'-7"	STIRRUP	
C502	E	5	4	19'-6"	---	

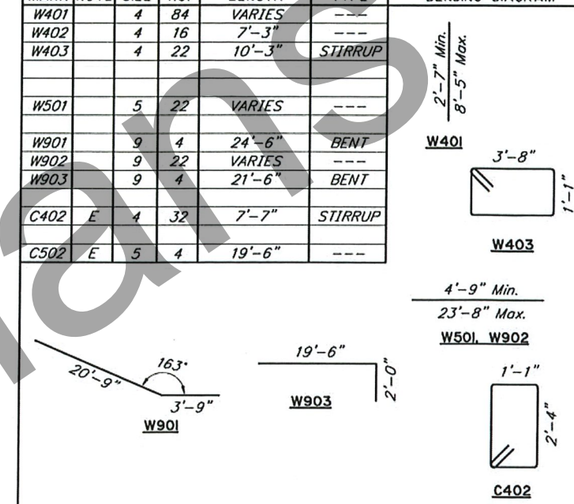

E - Epoxy-Coated

TOP OF WINGWALL ELEVATION TABLE (FT)		
LOCATION	A	B
ABUTMENT 1	398.66	398.78
ABUTMENT 2	399.64	399.52

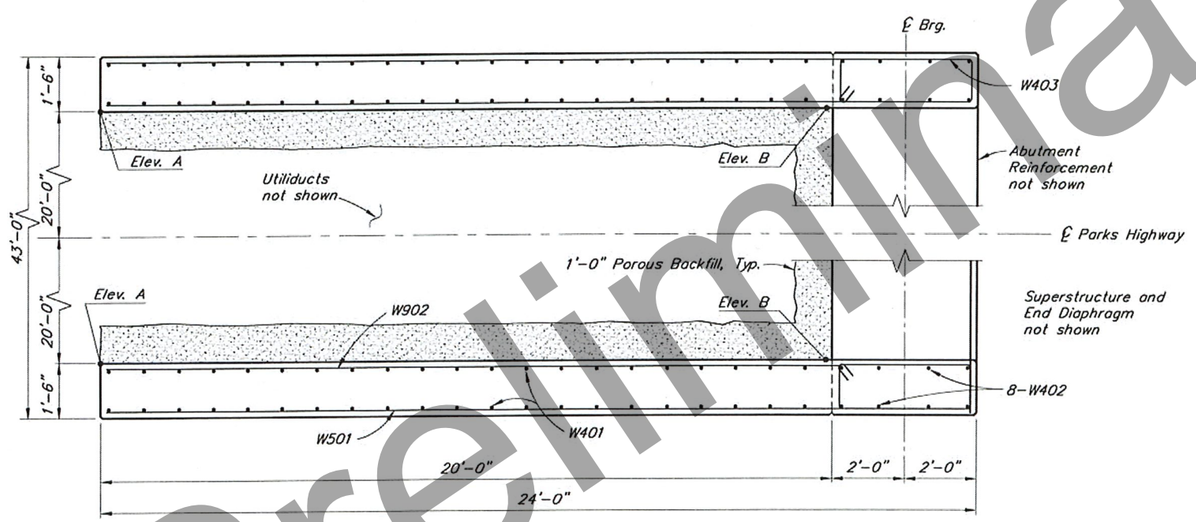

SECTION B-B

(Abutment 1 shown, Abutment 2 similar)

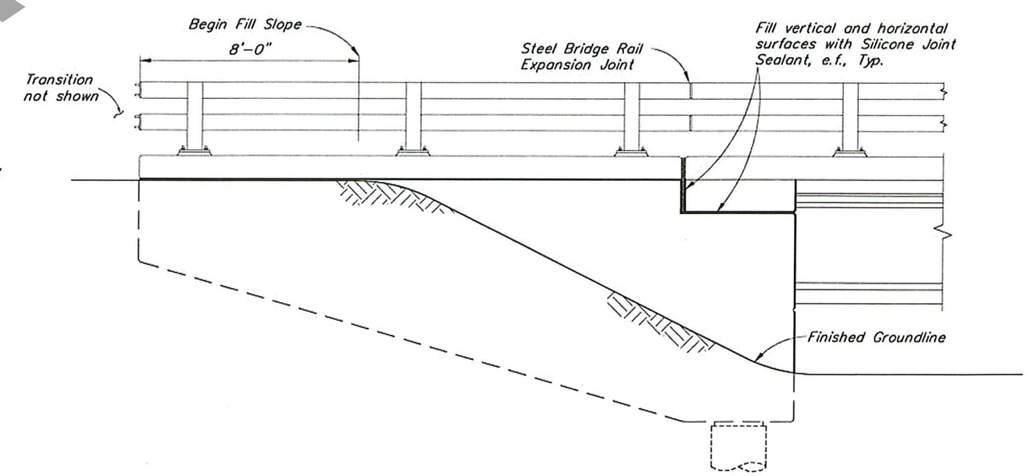

FINISHED ELEVATION

Preliminary Plans

DESIGNED BY: Elmer Marx	CHECKED: Hannah Bailey
DRAWN BY: Sam Sollie	CHECKED: Elmer Marx
QUANTITIES BY: Elmer Marx	CHECKED: Hannah Bailey

STATE OF ALASKA
DEPARTMENT OF TRANSPORTATION AND PUBLIC FACILITIES
BRIDGE SECTION
3132 Channel Drive
Juneau, Alaska 99801
907-465-2975

LITTLE GOLDSTREAM BRIDGE

PARKS HIGHWAY

WINGWALLS

BRIDGE NO. 678
DWG. NO. 8

R:\cad\678\678-1-WINGWALLS Thu, Jul/02/20 10:43am

STATE	PROJECT DESIGNATION	YEAR	SHEET NO.	TOTAL SHEETS
ALASKA	NFHWY00476	2020	N9	N21

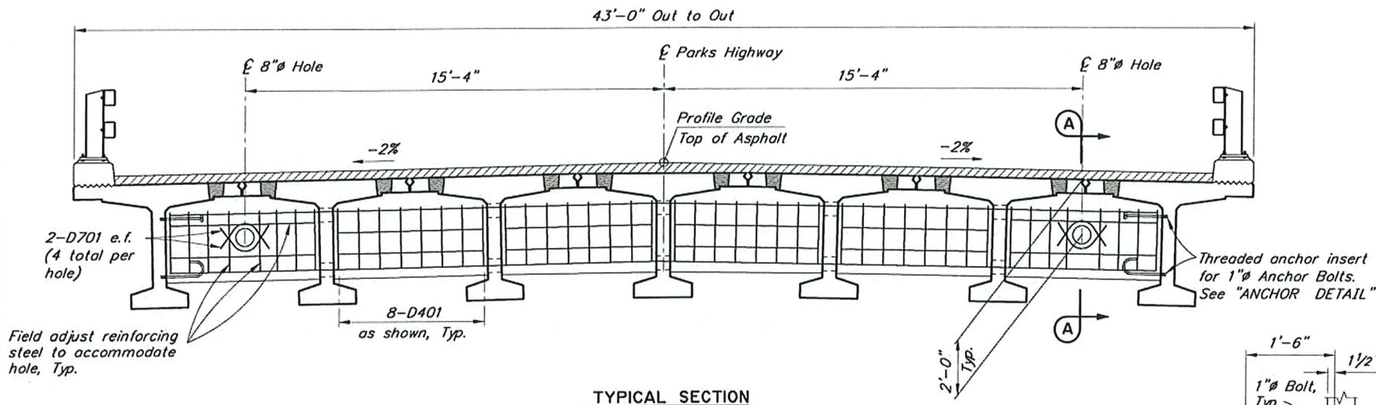

TYPICAL SECTION

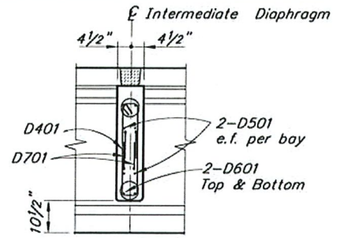

SECTION A-A

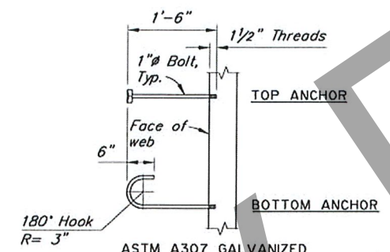

ASTM A307 GALVANIZED

ANCHOR DETAIL

REINFORCING STEEL - ONE DIAPHRAGM

MARK	NOTE	SIZE	NO.	LENGTH	TYPE	BENDING DIAGRAM
D401	E	4	48	6'-1"	STIRRUP	5" / 2'-3"
D501	E	5	24	5'-3"	---	
D601	E,M	6	4	35'-11"	---	
D701	E	7	8	3'-0"	BENT	

D401

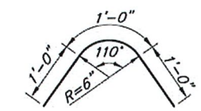

D701

E - Epoxy-Coated
M - Field adjust to match cross slope

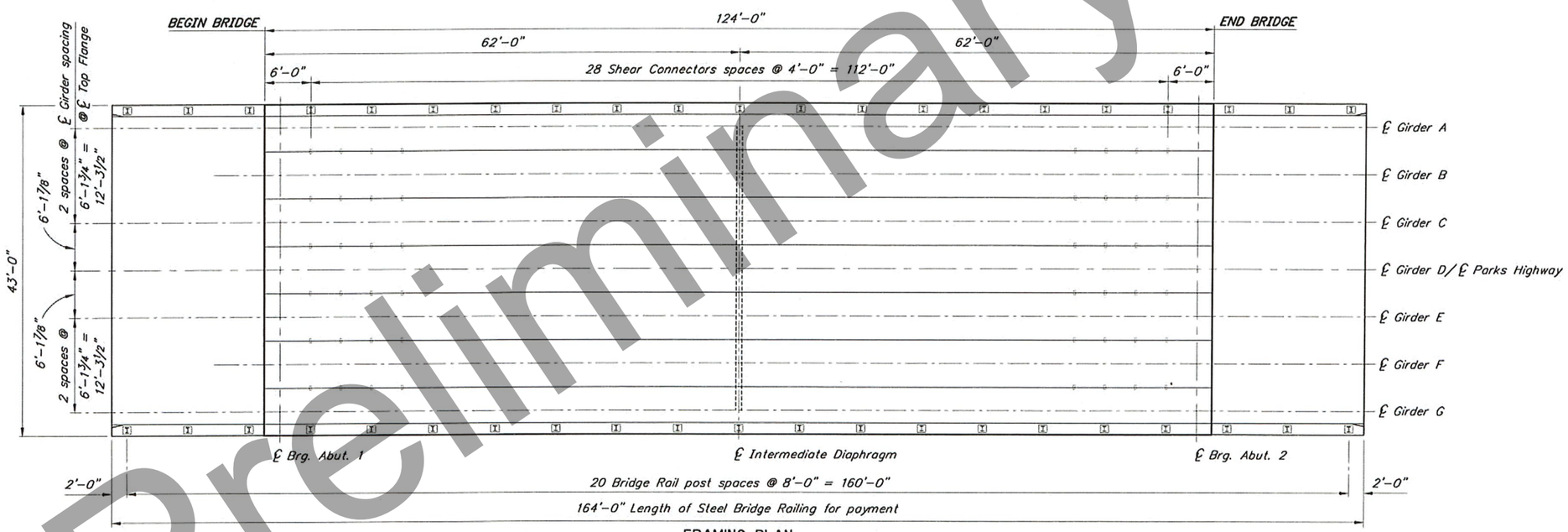

FRAMING PLAN

DESIGNED BY: Elmer Marx	CHECKED: Hannah Bailey
DRAWN BY: Sam Sollie	CHECKED: Elmer Marx
QUANTITIES BY: Elmer Marx	CHECKED: Hannah Bailey

STATE OF ALASKA
DEPARTMENT OF TRANSPORTATION AND PUBLIC FACILITIES
BRIDGE SECTION
3132 Channel Drive
Juneau, Alaska 99801
907-465-2975

LITTLE GOLDSTREAM BRIDGE

PARKS HIGHWAY

FRAMING PLAN AND TYPICAL SECTION

BRIDGE NO. 678
DWG. NO. 9

Preliminary Plans

R:\cad\678\678-1-TYPICAL SECTION Thu, Jul/02/20 10:43am

STATE	PROJECT DESIGNATION	YEAR	SHEET NO.	TOTAL SHEETS
ALASKA	NFHWY00476	2020	N10	N21

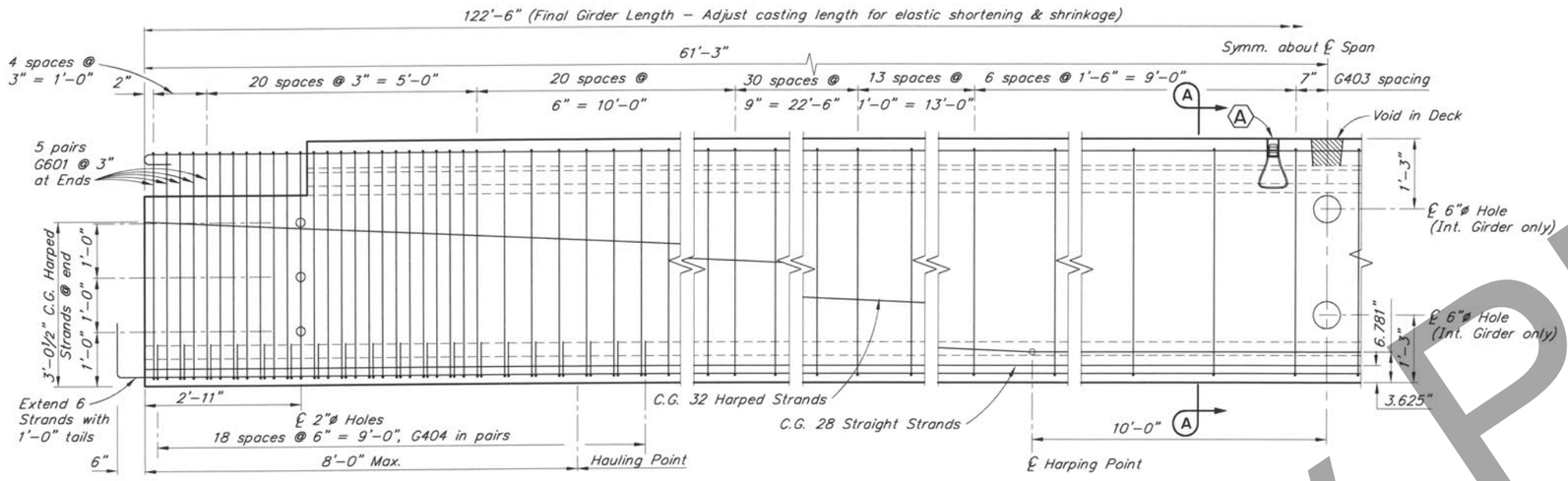

ELEVATION

REINFORCING STEEL - ONE GIRDER

MARK	NOTE	SIZE	NO.	LENGTH	TYPE	BENDING DIAGRAM
G401	E	4	200	5'-10"	BENT	
G401X	E,X	4	233	5'-10"	BENT	
G402	E,S	4	10	116'-4"	---	
G402X	E,S,X	4	10	116'-4"	---	
G403	E	4	356	5'-8"	BENT	
G404	E	4	76	3'-3"	BENT	
G501	E	5	200	5'-8"	---	
G501X	E,X	5	233	6'-4"	BENT	
G502	E,S	5	10	123'-8"	BENT	
G502X	E,S,X	5	10	123'-8"	BENT	
G601	E	6	20	5'-8"	BENT	
C401	E,L,X	4	94	4'-9"	BENT	
C501	E,S,X	5	2	123'-8"	---	

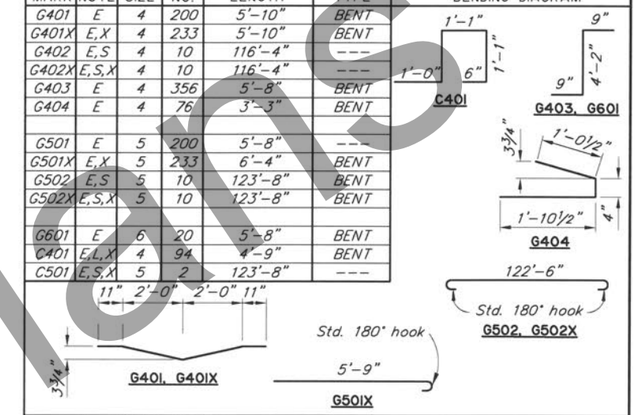

E – Epoxy-Coated
L – Ship 6 loose for diaphragm, per exterior girder
S – Length does not include splices. Minimum lap splice length for splices shall be 2'-0" for #4 bars and 2'-6" for #5 bars
X – Exterior Girders only

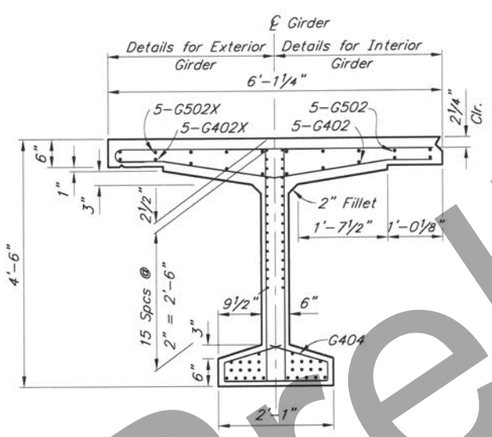

END VIEW

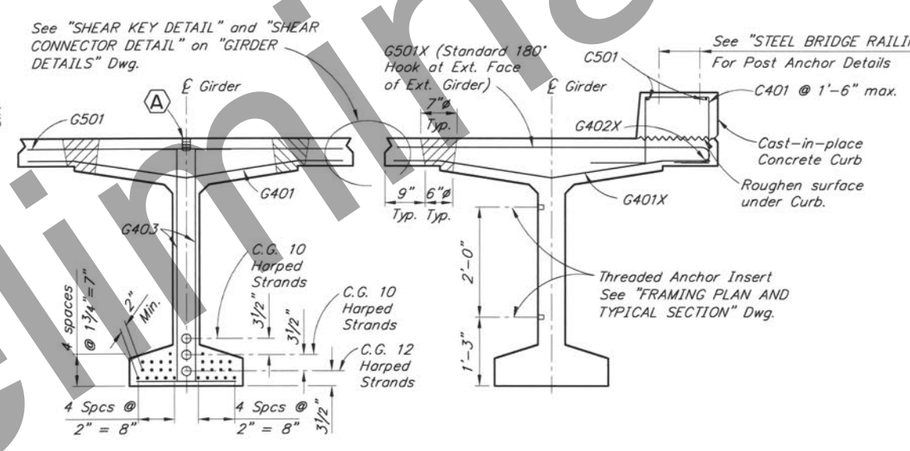

SECTION A-A

EXTERIOR GIRDER NEAR MID SPAN
(Unrelated Reinforcement not shown)

GIRDER NOTES:

Class P Concrete: at Stress Transfer.....f'ci = 6,500 psi
at 28 Days.....f'c = 7,500 psi

½"ø low-relaxation prestressing strands with an ultimate strength of 270 ksi and a cross sectional area of 0.153 in².

Steel stresses: Pretensioning – Jacking Stress 189 ksi
After initial losses 169 ksi
After all losses 139 ksi

One inch clear cover on reinforcing steel unless otherwise noted.

See "FRAMING PLAN AND TYPICAL SECTION" Dwg. for Shear Connector spacing.

Deflect forms to compensate for camber.

Galvanize structural steel embedded in girders except for shear connectors.

(A) 1"X1'-0" Coil Anchor Insert for vertical adjustment of girders. Recess 2". Prevent concrete from filling hole.

Omit Shear Key, Shear Key Connector and Deck Void in exterior face of exterior girders.

Cast ends of girders plumb with respect to roadway grade. Install web holes and web anchor inserts parallel to ℄ bearing.

Finish top flange with light broom.

Preliminary Plans

DESIGNED BY: Elmer Marx	CHECKED: Hannah Bailey
DRAWN BY: Sam Sollie	CHECKED: Elmer Marx
QUANTITIES BY: Elmer Marx	CHECKED: Hannah Bailey

STATE OF ALASKA
DEPARTMENT OF TRANSPORTATION AND PUBLIC FACILITIES
BRIDGE SECTION
3132 Channel Drive
Juneau, Alaska 99801
907-465-2975

LITTLE GOLDSTREAM BRIDGE

PARKS HIGHWAY

GIRDERS

BRIDGE NO. 678
DWG. NO. 10

R:\cad\678\678-1-GIRDERS Thu, Jul/02/20 10:43am

STATE	PROJECT DESIGNATION	YEAR	SHEET NO.	TOTAL SHEETS
ALASKA	NFHWY00476	2020	N11	N21

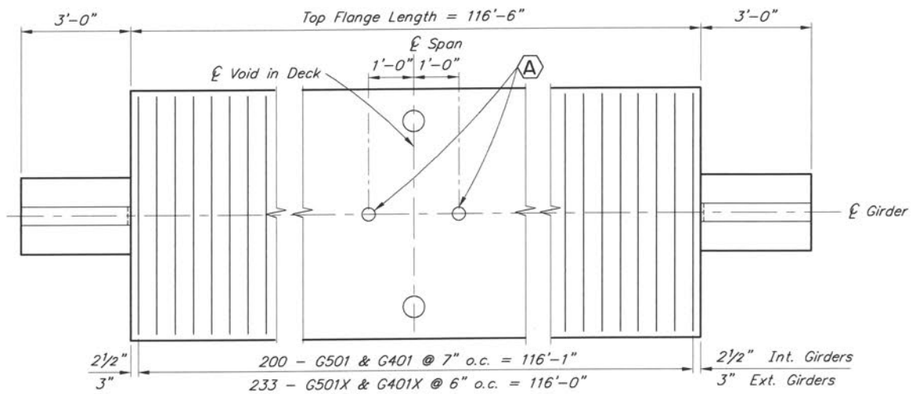

PLAN

No Scale

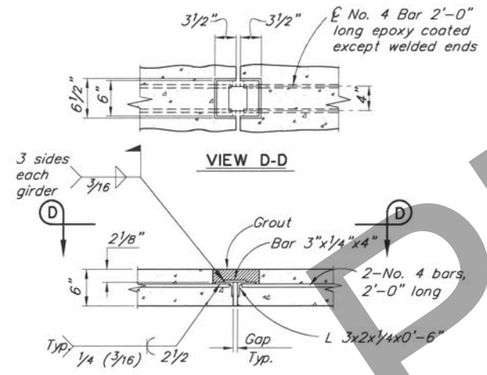

SHEAR CONNECTOR DETAIL

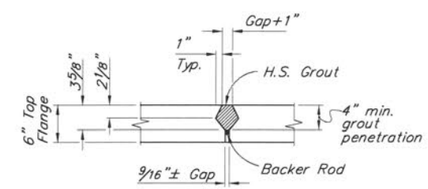

SHEAR KEY DETAIL

Preliminary Plans

R:\cad\678\678-1-GIRDERS (2) Thu, Jul/02/20 10:43am

DESIGNED BY: Elmer Marx	CHECKED: Hannah Bailey
DRAWN BY: Sam Sallie	CHECKED: Elmer Marx
QUANTITIES BY: Elmer Marx	CHECKED: Hannah Bailey

STATE OF ALASKA
DEPARTMENT OF TRANSPORTATION AND PUBLIC FACILITIES
BRIDGE SECTION
3132 Channel Drive
Juneau, Alaska 99801
907-465-2975

LITTLE GOLDSTREAM BRIDGE

PARKS HIGHWAY

GIRDER DETAILS

BRIDGE NO. 678

DWG. NO. 11

STATE	PROJECT DESIGNATION	YEAR	SHEET NO.	TOTAL SHEETS
ALASKA	NFHWY00476	2020	N12	N21

REINFORCING STEEL - ONE APPROACH SLAB

MARK	NOTE	SIZE	NO.	LENGTH	TYPE	BENDING DIAGRAM
S401	E,M	4	64	39'-7"	---	
S501	E	5	80	20'-5"	---	
S502	E	5	40	5'-0"	BENT	2'-0" / 3'-0" S502
S801	E	8	80	20'-5"	---	

E - Epoxy-Coated
M - Field adjust to match cross slope

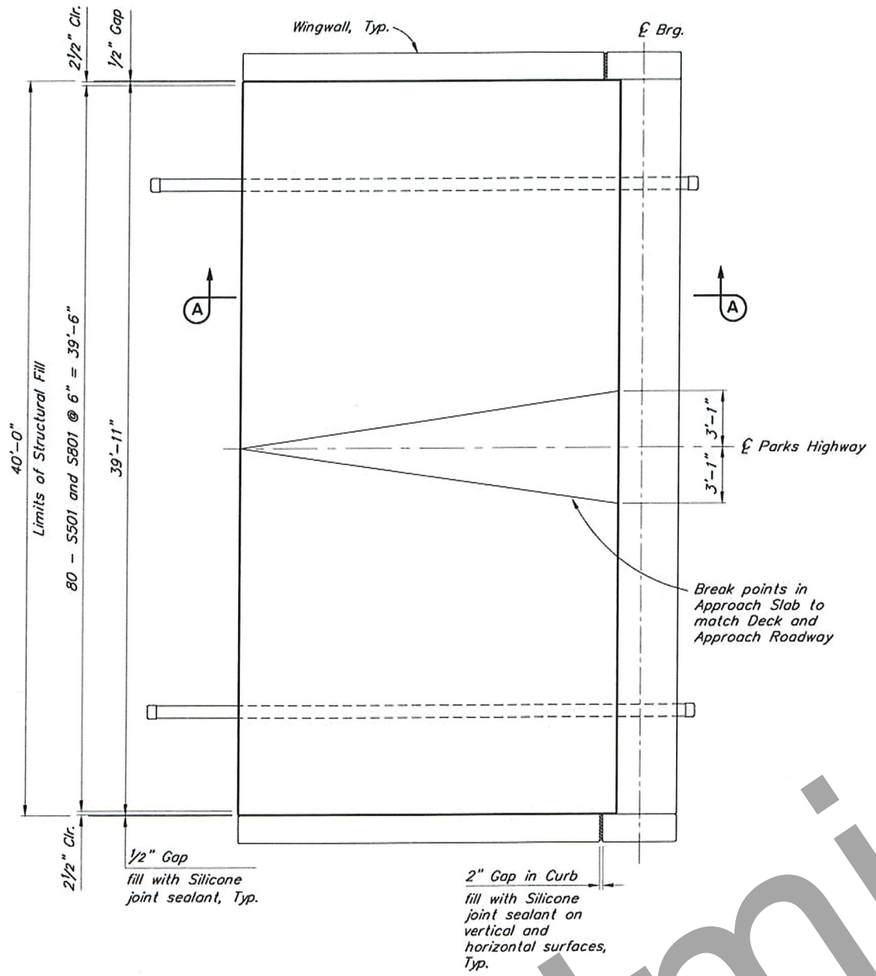

PLAN
(Abutment 1 shown Abutment 2 similar)

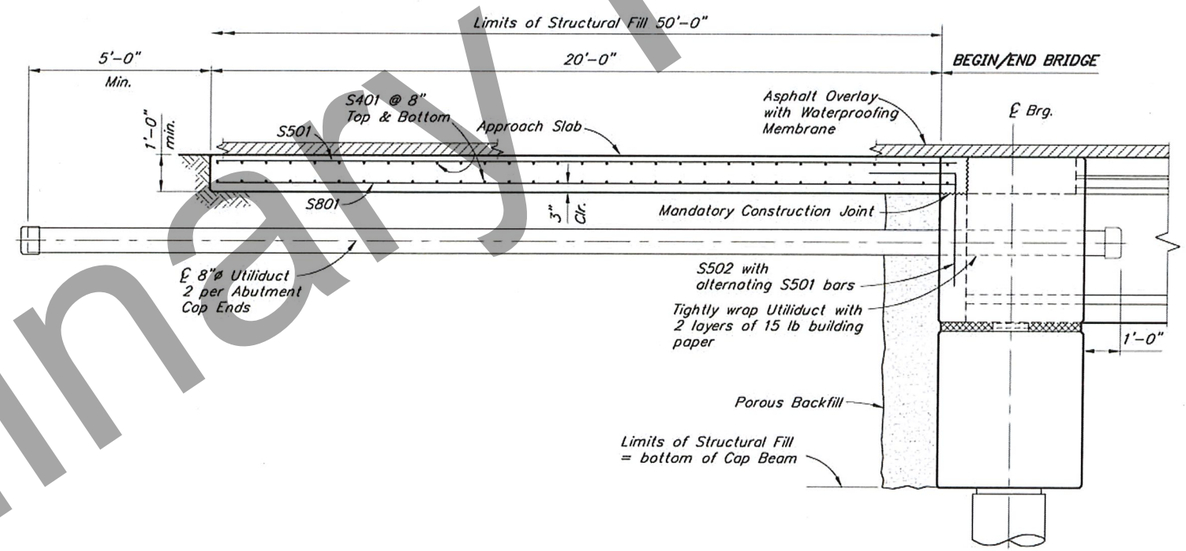

SECTION A-A

Preliminary Plans

R:\cad\678\678-1-APPROACH SLAB Thu, Jul/02/20 10:43am

DESIGNED BY: Elmer Marx	CHECKED: Hannah Bailey	
DRAWN BY: Sam Sallie	CHECKED: Elmer Marx	
QUANTITIES BY: Elmer Marx	CHECKED: Hannah Bailey	

STATE OF ALASKA
DEPARTMENT OF TRANSPORTATION AND PUBLIC FACILITIES
BRIDGE SECTION
3132 Channel Drive
Juneau, Alaska 99801
907-465-2975

LITTLE GOLDSTREAM BRIDGE
PARKS HIGHWAY
APPROACH SLAB

BRIDGE NO. 678
DWG. NO. 12

STATE	PROJECT DESIGNATION	YEAR	SHEET NO.	TOTAL SHEETS
ALASKA	NFHWY00476	2020	N13	N21

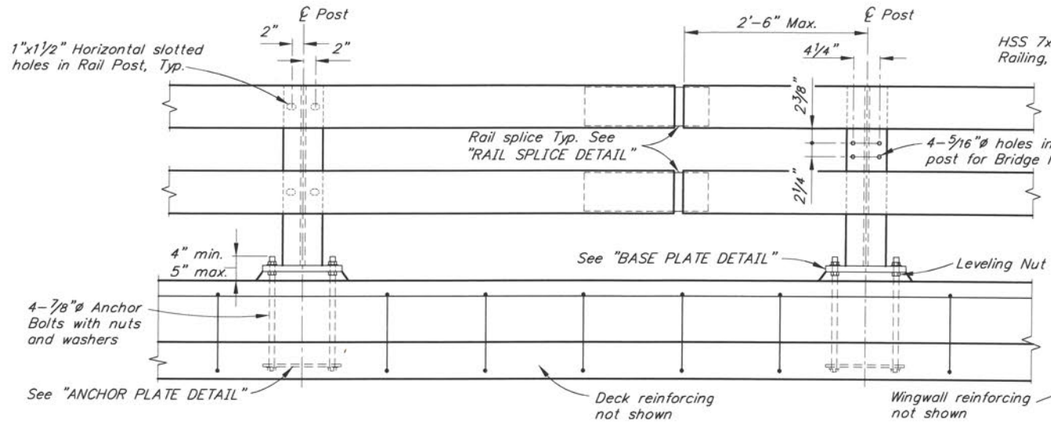

TYPICAL POST ELEVATION

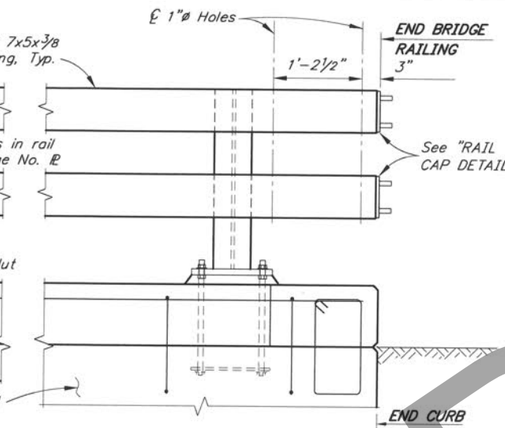

ELEVATION

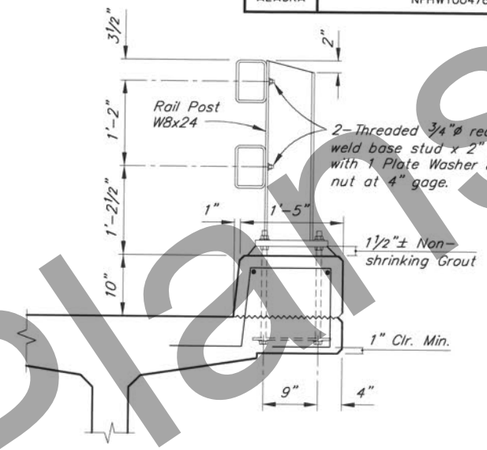

TYPICAL SECTION

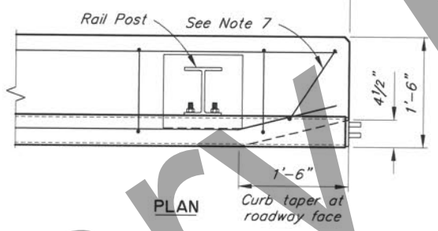

PLAN

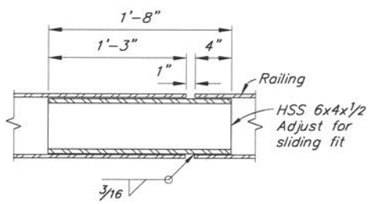

RAIL SPLICE DETAIL

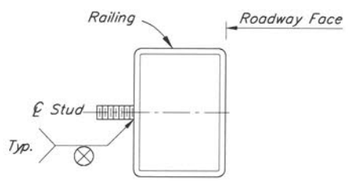

RAILING STUD DETAIL

END POST DETAIL

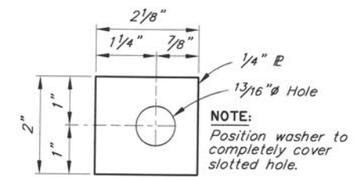

PLATE WASHER

No Scale

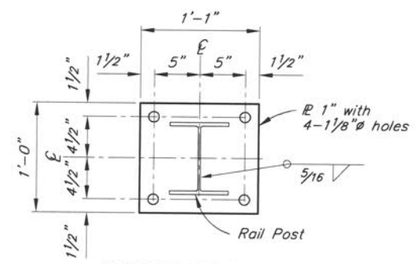

BASE PLATE DETAIL

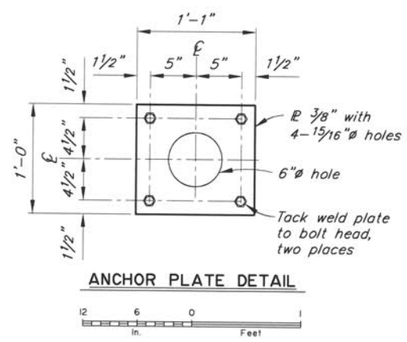

ANCHOR PLATE DETAIL

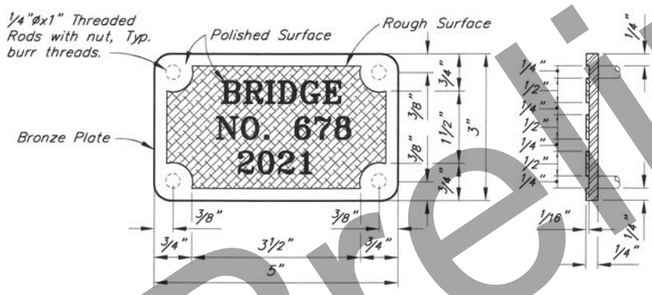

BRONZE BRIDGE NO. PLATE

No Scale

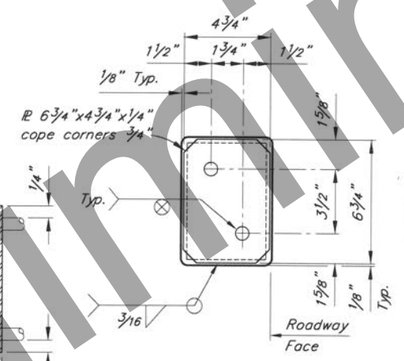

RAIL CAP DETAIL

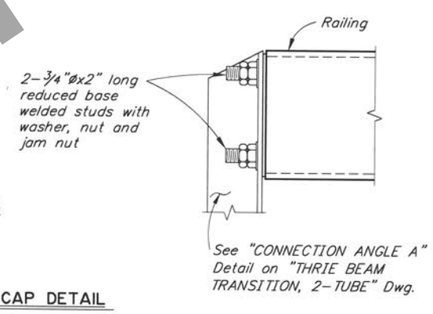

NOTES

1. Locate bridge number plates on right hand side of approaching traffic near each end as shown on General Layout Dwg. (2 total).
2. Furnish bridge number plates. Use "Century" type style lettering. Use studs and nuts that conform to UNS C65100 or C65500. Braze ¼"ø threaded rod to back of plate with nut – 4 required. Use tamper proof nuts.
3. Provide railing expansion joints at 50'-0" maximum intervals. Railing shall be continuous over 2 posts minimum. Railing expansion joints are required in rail panels that span bridge expansion joints.
4. Use grout with a minimum 24-hour f'c of 3000 psi in single placement.
5. See "FRAMING PLAN AND TYPICAL SECTION" Dwg. for rail post spacing.
6. Install bridge rail posts plumb.
7. Adjust reinforcing to accommodate curb taper.

DESIGNED BY: Elmer Marx	CHECKED: Hannah Bailey
DRAWN BY: Sam Sollie	CHECKED: Elmer Marx
QUANTITIES BY: Elmer Marx	CHECKED: Hannah Bailey

STATE OF ALASKA
DEPARTMENT OF TRANSPORTATION AND PUBLIC FACILITIES
BRIDGE SECTION
3132 Channel Drive
Juneau, Alaska 99801
907-465-2975

STATE OF ALASKA
REGISTERED STRUCTURAL ENGINEER

LITTLE GOLDSTREAM BRIDGE

PARKS HIGHWAY

STEEL BRIDGE RAILING, 2-TUBE

BRIDGE NO. 678
DWG. NO. 13

R:\cad\678\678-1-RAILING Thu, Jul/02/20 10:44am

Preliminary Plans

STATE	PROJECT DESIGNATION	YEAR	SHEET NO.	TOTAL SHEETS
ALASKA	NFHWY00476	2020	N14	N21

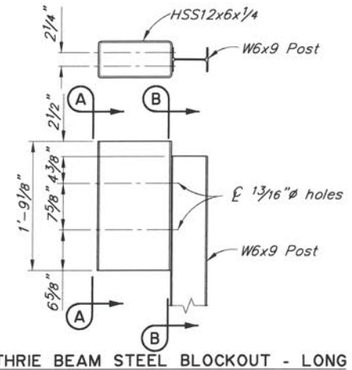

THRIE BEAM STEEL BLOCKOUT - LONG

See Note 4 for additional details

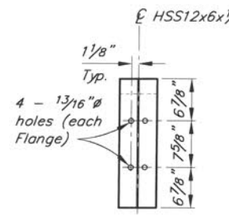

VIEW A-A

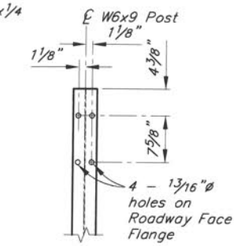

SECTION B-B

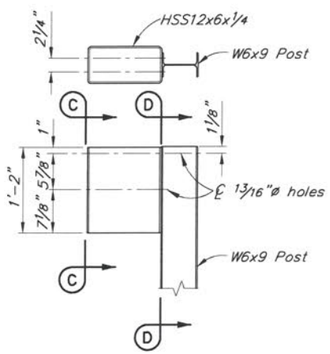

THRIE BEAM STEEL BLOCKOUT - SHORT

See Note 4 for additional details

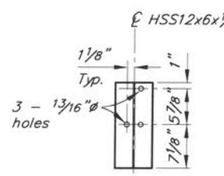

VIEW C-C

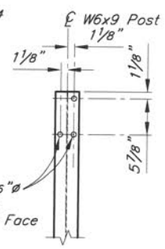

SECTION D-D

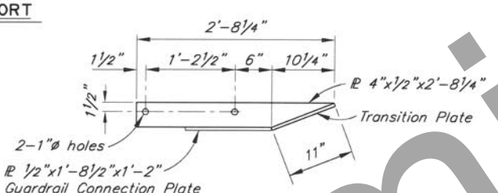

VIEW F-F

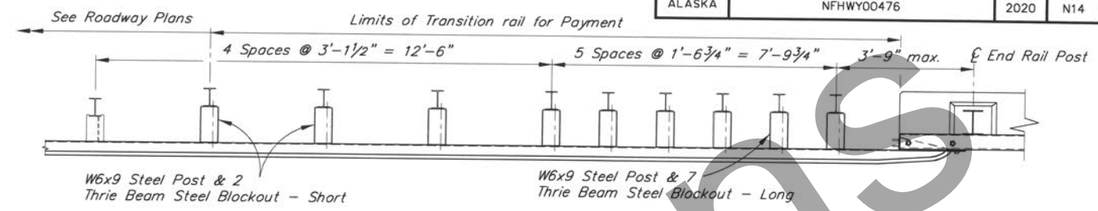

PLAN

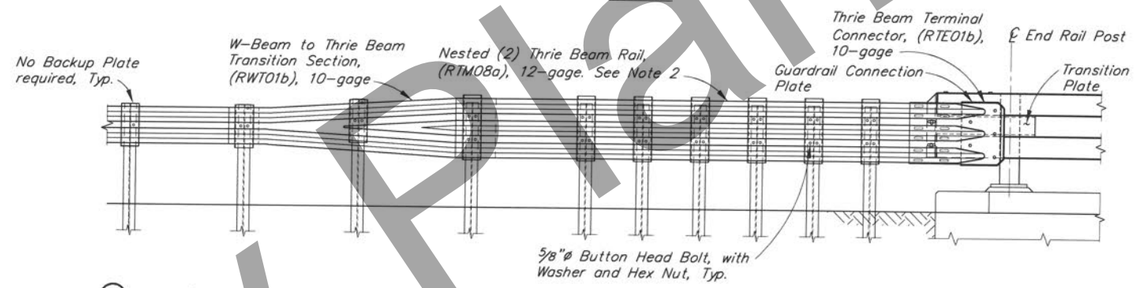

ELEVATION

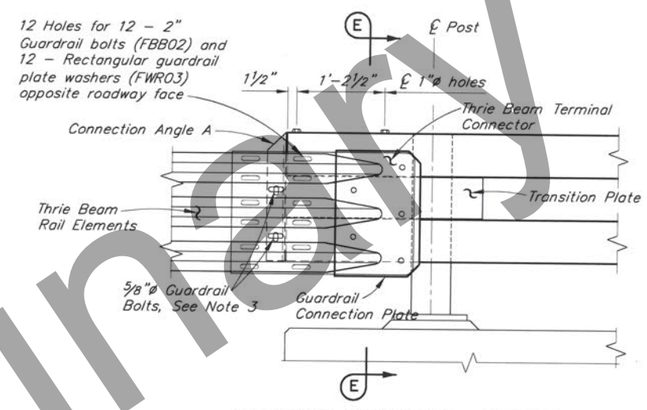

TRANSITION CONNECTION - ELEVATION

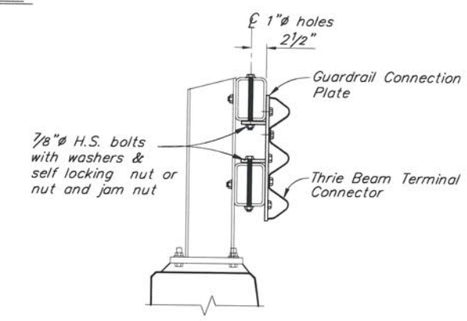

SECTION E-E

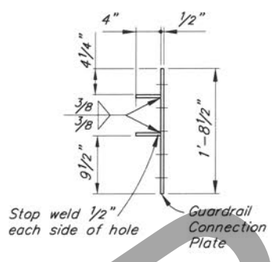

SECTION H-H

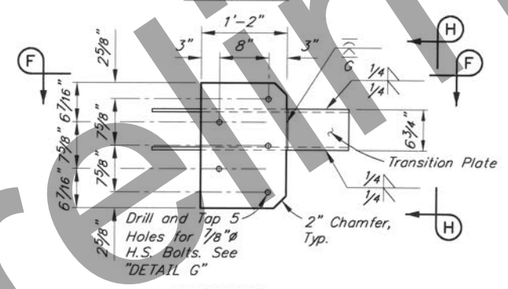

ELEVATION

GUARDRAIL CONNECTION PLATE DETAILS

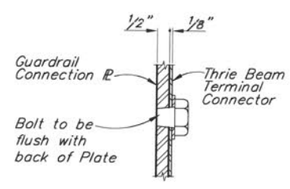

DETAIL G

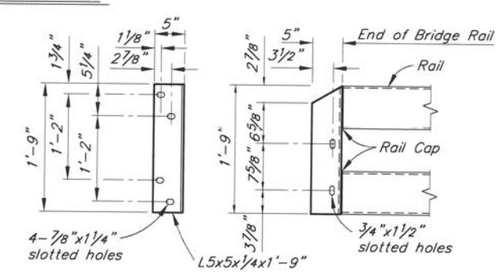

END VIEW

ELEVATION

CONNECTION ANGLE A

No Scale

NOTES:

1. All guardrail and guardrail connection hardware to conform to AASHTO M 180. Use H.S. Bolts conforming to ASTM A325. All other steel conforms to ASTM A709 Grade 50.
2. Lap approach guardrail to prevent snags from oncoming traffic.
3. Provide 4 1/2" horizontal slots in approach guardrail. Adjust guardrail bolts for sliding fit.
4. Conform to G-00, G-05S and G-10 of the Standard Plans for all guardrail details not shown.

DESIGNED BY: Elmer Marx	CHECKED: Hannah Bailey
DRAWN BY: Sam Sollie	CHECKED: Elmer Marx
QUANTITIES BY: Elmer Marx	CHECKED: Hannah Bailey

STATE OF ALASKA
DEPARTMENT OF TRANSPORTATION AND PUBLIC FACILITIES
BRIDGE SECTION
3132 Channel Drive
Juneau, Alaska 99801
907-465-2975

LITTLE GOLDSTREAM BRIDGE

PARKS HIGHWAY

THRIE BEAM TRANSITION, 2-TUBE

BRIDGE NO. 678

DWG. NO. 14

R:\cad\678\678-1-THRIE BEAM Thu, Jul/02/20 10:44am

Preliminary Plans

STATE	PROJECT DESIGNATION	YEAR	SHEET NO.	TOTAL SHEETS
ALASKA	NFHWY00476	2020	N15	N21

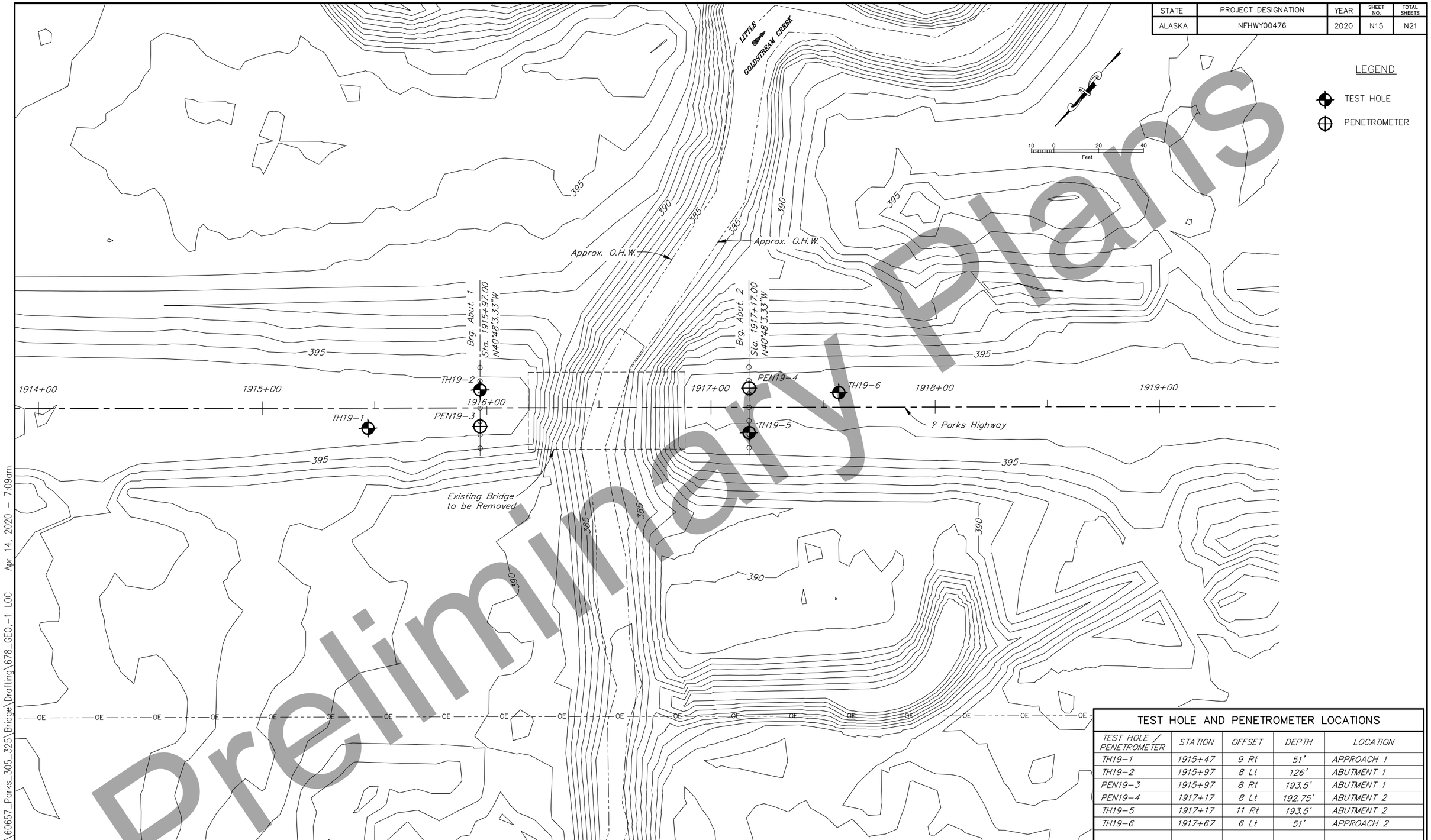

Preliminary Plans

TEST HOLE AND PENETROMETER LOCATIONS

TEST HOLE / PENETROMETER	STATION	OFFSET	DEPTH	LOCATION
TH19-1	1915+47	9 Rt	51'	APPROACH 1
TH19-2	1915+97	8 Lt	126'	ABUTMENT 1
PEN19-3	1915+97	8 Rt	193.5'	ABUTMENT 1
PEN19-4	1917+17	8 Lt	192.75'	ABUTMENT 2
TH19-5	1917+17	11 Rt	193.5'	ABUTMENT 2
TH19-6	1917+67	6 Lt	51'	APPROACH 2

DESIGNED BY: D. Hemstreet	CHECKED: Engineer		
DRAWN BY: R. Angell	CHECKED: J. Nicolazzo		
QUANTITIES BY: Engineer	CHECKED: Engineer		

STATE OF ALASKA
DEPARTMENT OF TRANSPORTATION AND PUBLIC FACILITIES
STATEWIDE MATERIALS

REGISTERED PROFESSIONAL ENGINEER

LITTLE GOLDSTREAM BRIDGE

PARKS HIGHWAY

TEST HOLE & PENETROMETER LOCATION

BRIDGE NO. 0678
DWG. NO. 15

H:\Projects\Parks_Hwy\60657_Parks_305_325\Bridge\Drafting\678_GEO.-1 LOC Apr 14, 2020 - 7:09am

STATE	PROJECT DESIGNATION	YEAR	SHEET NO.	TOTAL SHEETS
ALASKA	NFHWY00476	2020	N16	N21

TYPICAL TEST HOLE LOG

DATE: Date begun – Date completed
STATION / OFFSET: XX+XX FEET RT or LT

Hole diameter: 3.5 in

Elevation(ft): 100, 95, 90, 85, 80, 75, 70, 65, 60, 55, 50, 45, 40, 35, 30

Depth(ft)

Frozen

Graphic materials description
Stratum contact — 5.0ft
Estimated stratum contact

Observed Ground Water Date: xx/xx/xx

Transitional stratum change

Soil graphic and soil type explanation

GRAVEL (GP)	SILTY GRAVEL (GM)
GRAVEL (GW)	CLAYEY GRAVEL (GC)
SAND (SP)	SILTY SAND (SM)
SAND (SW)	CLAYEY SAND (SC)
SILT (ML)	ORGANIC SILTS (OL)
SILT (MH)	ORGANIC CLAYS (OH)
CLAY (CL)	
CLAY (CH)	
ORGANICS OR PEAT (PT)	
COBBLE OR BOULDER INDICATED BY DRILL REACTION OR CORE	
ICE	
WEATHERED BEDROCK (Strength Grade, Weathering Grade)	
BEDROCK (Strength Grade, Weathering Grade)	
COAL	

Drilling Method

RQD % = Sum of lengths of core pieces > 4" / total length of run
L = Longest length of core in run
S = Shortest lkength of core in run — 32.0ft

SAND with Silt	USCS soil name
p200 = 8%	% passing the #200 (0.075mm) sieve
Sa=42%	% sand, retained on #200 (0.075mm) sieve and passing #4 (4.75mm) sieve
Gr=50%	% gravel, retained on #4 (4.75mm) sieve
Moisture=5.0%	moisture content
Org=10%	organic content
PI=8	plasticity index
LL=18	liquid limit
SM	USCS classification
PP=2.0	pocket penetrometer (ton / SF)
TV=2.0	torvane (ton / SF)

GRAPHICS: (double symbols with split graphics may be used to indicate combinations of soil types) — 48.0ft

07–3533 = soil sample number (year – sample number)
SNT = Sample Not Tested

Interval sampled with recovery shaded — 10

SPT = blow count / ft. (total blows for second and third 6" increment) with standard penetration test sampler w/ 1.4 ID, 2" O.D. using a CME autohammer with 140 lb. hammer and a 30" freefall latest edition AASHTO T 206 (ASTM D1586).

SPT_{60} = same as SPT except, instead of CME autohammer, the cathead/rope method was used.

SS = blow count with 2" I.D., 2.5" O.D. sampler driven by a 340 lb. CME autohammer with a 30" freefall.

CORE — MC = blow count with 2.5" I.D., 3" O.D. sampler driven by a 340 lb. CME autohammer with a 30" freefall.

Indicates no valid SPT

GS — Grab sample from drill cuttings or directly from hole sidewall

CS — Continuous sampler

* — Indicates sampler refusal. Refusal defined as 50 or more blows per 6" increment, 100 total blows, or no movement observed with 10 successive blows.

VS — Vane shear test, undrained shear strength, PSF

ST — Thin walled sampler, pushed

Bottom of hole (BOH) — Total depth 70.0ft

NOTES:

1) The test hole logs depicted graphically in these drawings are distillations of the original field logs, based on post–field investigation review and analysis. These drafted logs include changes made to field descriptions based upon laboratory test data, review and analysis. Detailed field observations of rock and soil sampled during the drilling program are not reproduced in the drafted logs.
2) Description of soils follows Alaska Geotechnical Procedures manual. Classification of soils follows Unified Soil Classification System (ASTM D2487).
3) The test hole logs from these sheets are an integral part of the Foundation Geology Report. See Construction Contract Bid Documents – invitation to bid/notice to bidders. Important information about the test hole logs and the foundation investigation is contained in the report. The test hole logs are not severable from and cannot be completely and correctly interpreted without reference to the Foundation Geology Report.

TYPICAL PENETROMETER TEST LOG

DATE: Date begun – Date completed
STATION / OFFSET: XX+XX / RT or LT (feet)

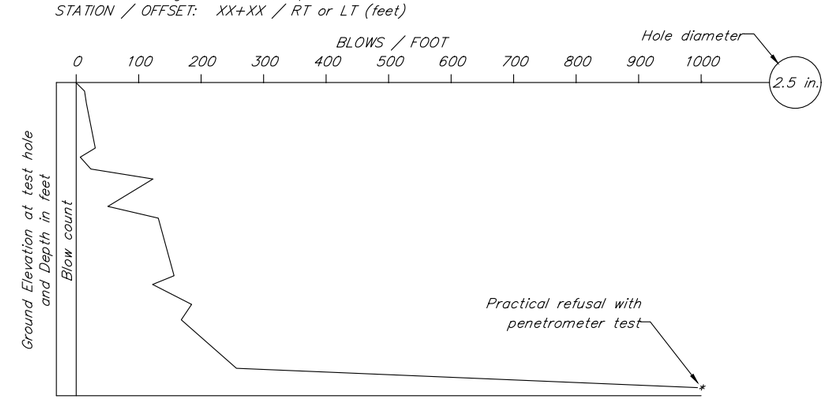

Bottom of hole (BOH)

NOTES:
Penetrometer W/2.5" O.D., with a CME AUTOMATIC Hammer using a 340 lb. weight and a 30" freefall

Preliminary Plans

H:\Projects\Parks_Hwy\60657_Parks_305_325\Bridge\Drafting\678_GEO,-2 TYP Apr 14, 2020 – 7:09am

DESIGNED BY: D. Hemstreet	CHECKED: Engineer	STATE OF ALASKA DEPARTMENT OF TRANSPORTATION AND PUBLIC FACILITIES STATEWIDE MATERIALS	LITTLE GOLDSTREAM BRIDGE PARKS HIGHWAY TEST HOLE & PENETROMETER LEGEND
DRAWN BY: R. Angell	CHECKED: J. Nicolazzo		BRIDGE NO. 0678
QUANTITIES BY: Engineer	CHECKED: Engineer		DWG. NO. 16

STATE	PROJECT DESIGNATION	YEAR	SHEET NO.	TOTAL SHEETS
ALASKA	NFHWY00476	2020	N17	N21

TH19-1

Date: 9/14/19 – 9/14/19
Station: 1915+47 Offset: 9 Rt

Hollow-Stem Auger; 6.5 in.

Elev. (ft)	Depth	Description
396	0.5	Asphalt
395	3.5	X 19-4431 AUGER: SAND with Silt and Gravel (FILL) (SP-SM) brown, poorly-graded, dry to moist 19-4431 p200=9.2%, Sa=46%, Gr=42%, PI=NP, LL=NV, SP-SM
	4.5	16 19-4432 SPT: SILTY SAND with Gravel (FILL) (SM) tan to brown, moist, schist fragments, micaceous
390		SILT (ML) brown, Organics present 19-4432 p200=90.2%, Sa=10%, Gr=0%, Moisture=20.1%, Org=3%, PI=NP, LL=NV, ML
		6 19-4433 SPT: wet 19-4433 p200=93.5%, Sa=5%, Gr=0%, Moisture=27.9%, Org=3.9%, PI=NP, LL=NV, ML
385		6 19-4434 SPT: Organics present 19-4434 p200=96.4%, Sa=4%, Gr=0%, Moisture=22%, Org=3.8%, PI=NP, LL=31, ML
380		8 19-4435 SPT: 19-4435 p200=94.1%, Sa=6%, Gr=0%, Moisture=17.5%, Org=2.3%, PI=NP, LL=NV, ML
375	24.0	4 19-4436 SPT: SILT with Sand (ML) brown to tan, moist to wet, Organics present 19-4436 p200=83.7%, Sa=16%, Gr=0%, Moisture=16.4%, Org=2.8%, PI=NP, LL=27, ML
370	29.0	10 19-4437 SPT: SILT (ML) brown to tan, trace Organics present 19-4437 p200=97.5%, Sa=3%, Gr=0%, Moisture=13.6%, Org=0.8%, PI=NP, LL=NV, ML
365		10 19-4438 SPT: tan to brown 19-4438 p200=97.8%, Sa=2%, Gr=0%, Moisture=12.4%, Org=1.1%, PI=NP, LL=NV, ML
360		13 19-4439 SPT: 19-4439 p200=95.8%, Sa=4%, Gr=0%, Moisture=13.1%, Org=0.9%, PI=NP, LL=NV, ML
355		14 19-4440 SPT: 19-4440 p200=96.7%, Sa=3%, Gr=0%, Moisture=14.1%, Org=1.1%, PI=NP, LL=NV, ML
350		9 19-4441 SPT: wet 19-4441 p200=92.3%, Sa=8%, Gr=0%, Moisture=32.5%, Org=1%, PI=NP, LL=NV, ML
345	51.0	

B.O.H. 51 ft.
Notes: Approach 1
Hammer: CME Auto Hammer
Equipment: CME 55 Truck
Drilling Method: 6.5" Hollow Auger
Geologist: J. SIMPSON
Latitude: −148.94383 Longitude: 64.66544

TH19-2

Date: 9/21/19 – 9/22/19
Station: 1915+97 Offset: 8 Lt

Tri-cone & Casing; 4 in.

Elev. (ft)	Depth	Description
396	0.5	Asphalt
395	3.0	SAND with Gravel (FILL) (SP) brown, poorly-graded, dry to moist
	6.8	18 SPT: SANDY SILT with Gravel (FILL) (ML) tan, moist, schist fragments, micaceous
390		SILT (ML) tan to brown, Organics present
385		8 19-4446 SPT: 19-4446 p200=94.7%, Sa=5%, Gr=0%, Moisture=30.5%, Org=2.4%, PI=NP, LL=NV, ML
		8 19-4447 SPT: Organics present 19-4447 p200=90.4%, Sa=10%, Gr=0%, Moisture=27.7%, Org=3.6%, PI=NP, LL=NV, ML
380		5.5 19-4448 SPT: 19-4448 p200=85.7%, Sa=14%, Gr=0%, Moisture=27.1%, PI=NP, LL=NV, ML
375		9 19-4449 SPT: Organics present brown to tan 19-4449 p200=82.9%, Sa=17%, Gr=0%, Moisture=25.9%, PI=NP, LL=NV, ML
370		15 19-4450 SPT: tan to brown 19-4450 p200=98.0%, Sa=2%, Gr=0%, Moisture=25.9%, PI=NP, LL=NV, ML
365		10 19-4451 SPT: tan 19-4451 p200=99.3%, Sa=1%, Gr=0%, Moisture=31.1%, PI=NP, LL=NV, ML
360		24 19-4452 SPT: 19-4452 p200=95.3%, Sa=5%, Gr=0%, Moisture=27.9%, PI=NP, LL=NV, ML
355	44.0 9/21/2019	20 SPT: no recovery
350		15 SPT: tan to brown
345		
340	58.0	SAND with Silt (SP-SM) brown to gray, poorly-graded, trace Organics present
		19-4453

TH19-2 (cont)

Date: 9/21/19 – 9/22/19
Station: 1915+97 Offset: 8 Lt

Tri-cone & Casing; 4 in.

Elev. (ft)	Depth	Description
335	61.0	21 SPT: 19-4453 gravel at very bottom of spoon, liquefies when agitated, p200=11.8%, Sa=87%, Gr=0%, Moisture=20.7%, Org=0.4%, PI=NP, LL=NV, SP-SM
		SAND with Gravel (SP) gray to brown, poorly-graded
330		17 19-4454 SPT: 19-4454 p200=2.9%, Sa=79%, Gr=15%, PI=NP, LL=NV, SP
325		20 19-4455 SPT: brown 19-4455 p200=2.0%, Sa=60%, Gr=31%, PI=NP, LL=NV, SP
320		gravelly layer
315		13 SPT: very low recovery, mostly gravel 1/2"– with a small amount of sand
310		
305		
300	99.0	59 19-4456 SPT: SILTY SAND (SM) gray 19-4456 p200=16.1%, Sa=83%, Gr=0%, PI=NP, LL=NV, SM
295		
290		gravelly layer
285	109.0	57 19-4457 SPT: SAND w/ Silt (SP-SM) gray, poorly-graded 19-4457 p200=5.7%, Sa=91%, Gr=2%, PI=NP, LL=NV, SP-SM
	113.0	SAND with Gravel (SP-SM) gray, poorly-graded
280		19-4458 (cont.)

TH19-2 (cont)

Date: 9/21/19 – 9/22/19
Station: 1915+97 Offset: 8 Lt

Tri-cone & Casing; 4 in.

Elev. (ft)	Depth	Description
275		14 SPT: 19-4458 p200=3.6%, Sa=61%, Gr=25%, PI=NP, LL=NV, SP
		30 SPT: very low recovery
270	126.0	

B.O.H. 126 ft.
Notes: Abutment 1
Hammer: CME Auto Hammer
Equipment: CME 55 Truck
Drilling Method: Tricone
Geologist: J. SIMPSON
Latitude: −148.94394 Longitude: 64.6653

Preliminary Plans

DESIGNED BY: D. Hemstreet	CHECKED: Engineer	STATE OF ALASKA DEPARTMENT OF TRANSPORTATION AND PUBLIC FACILITIES STATEWIDE MATERIALS	LITTLE GOLDSTREAM BRIDGE PARKS HIGHWAY TEST HOLE & PENETROMETER LOGS
DRAWN BY: R. Angell	CHECKED: J. Nicolazzo		BRIDGE NO. 0678
QUANTITIES BY: Engineer	CHECKED: Engineer		DWG. NO. 17

H:\Projects\Parks_Hwy\60657_Parks_305_325\Bridge\Drafting\678_GEO_-3 TH19-1&2 Apr 14, 2020 – 7:10am

STATE	PROJECT DESIGNATION	YEAR	SHEET NO.	TOTAL SHEETS
ALASKA	NFHWY00476	2020	N18	N21

PEN19-3

Date: 9/16/19 – 9/18/19
Station: 1915+97 Offset: 8 Rt

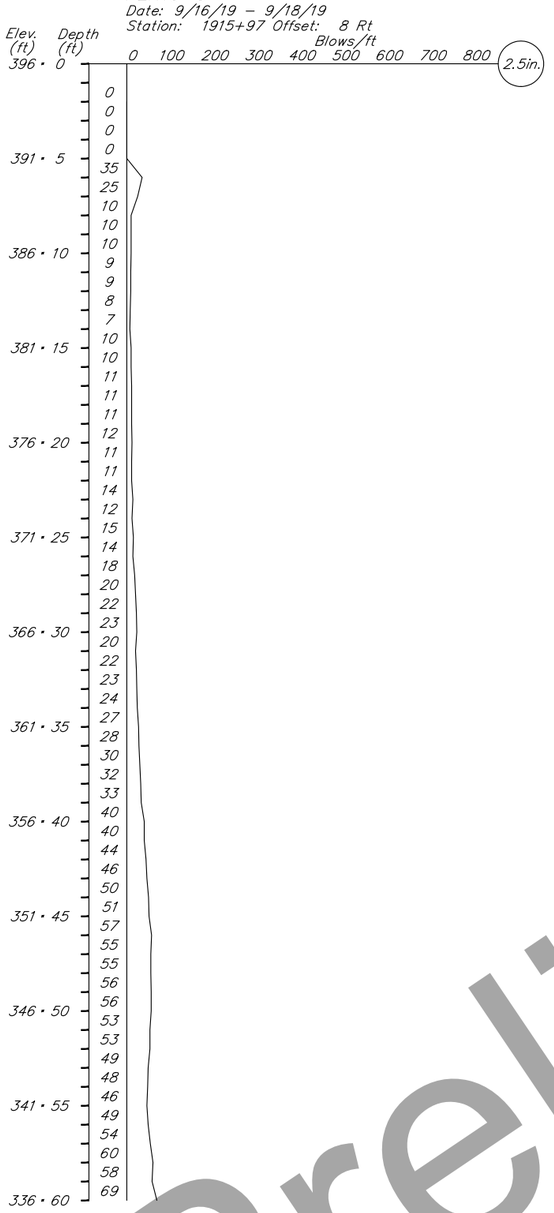

PEN19-3 (cont)

Date: 9/16/19 – 9/18/19
Station: 1915+97 Offset: 8 Rt

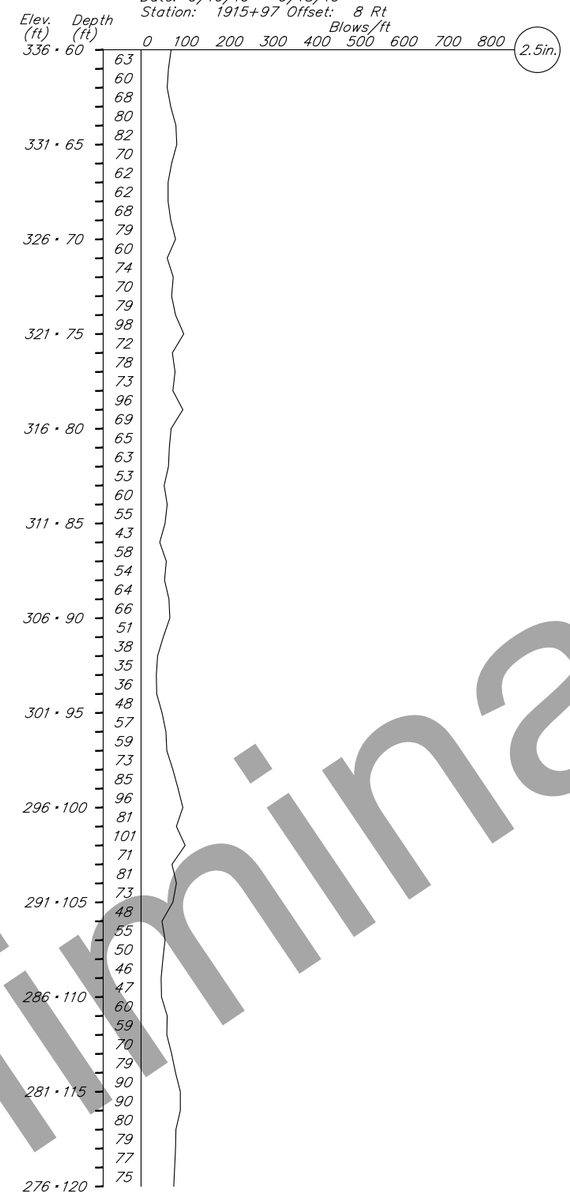

PEN19-3 (cont)

Date: 9/16/19 – 9/18/19
Station: 1915+97 Offset: 8 Rt

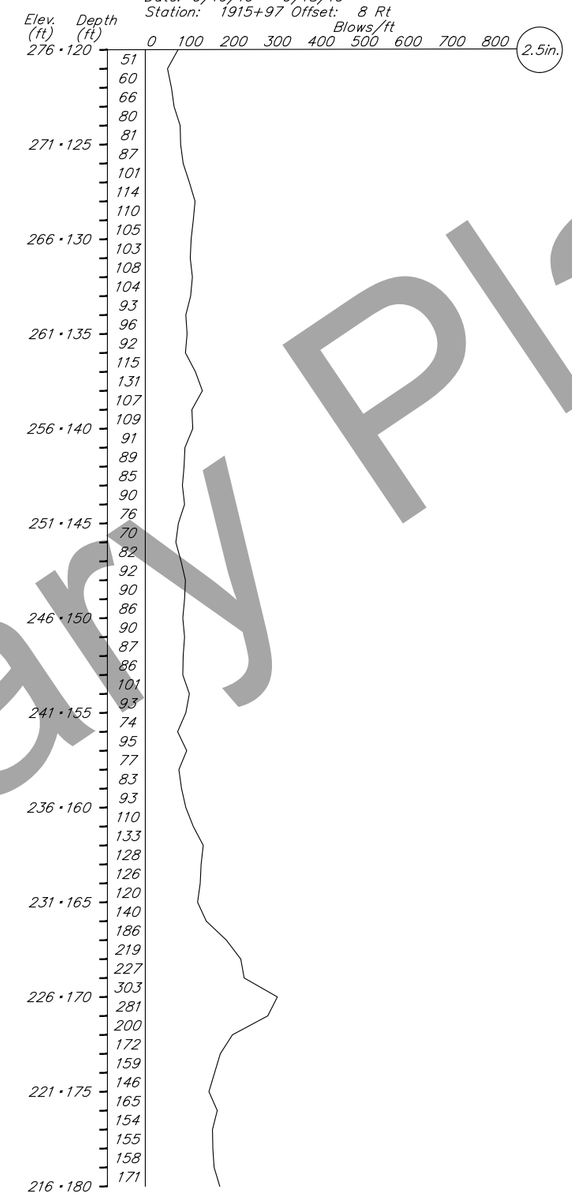

PEN19-3 (cont)

Date: 9/16/19 – 9/18/19
Station: 1915+97 Offset: 8 Rt

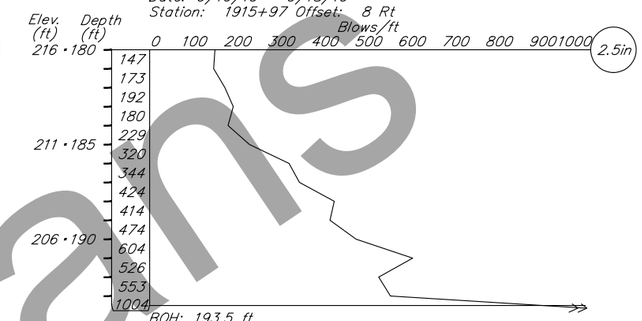

BOH: 193.5 ft
Notes: Abutment 1
Hammer: CME Auto Hammer 340 lb hammer
Equipment: CME 55 Truck
Drilling Method: Penetrometer
Geologist: J. SIMPSON
Latitude: −148.9442 Longitude: 64.66534

Preliminary Plans

DESIGNED BY: D. Hemstreet	CHECKED: Engineer	STATE OF ALASKA DEPARTMENT OF TRANSPORTATION AND PUBLIC FACILITIES STATEWIDE MATERIALS	LITTLE GOLDSTREAM BRIDGE PARKS HIGHWAY TEST HOLE & PENETROMETER LOGS
DRAWN BY: R. Angell	CHECKED: J. Nicolazzo		BRIDGE NO. 0678
QUANTITIES BY: Engineer	CHECKED: Engineer		DWG. NO. 18

H:\Projects\Parks_Hwy\60657_Parks_305_325\Bridge\Drafting\678_GEO,-4 PEN19-3 Apr 14, 2020 – 7:11am

STATE	PROJECT DESIGNATION	YEAR	SHEET NO.	TOTAL SHEETS
ALASKA	NFHWY00476	2020	N19	N21

PEN19–4

Date: 9/10/19 – 9/15/19
Station: 1917+17 Offset: 8 Lt

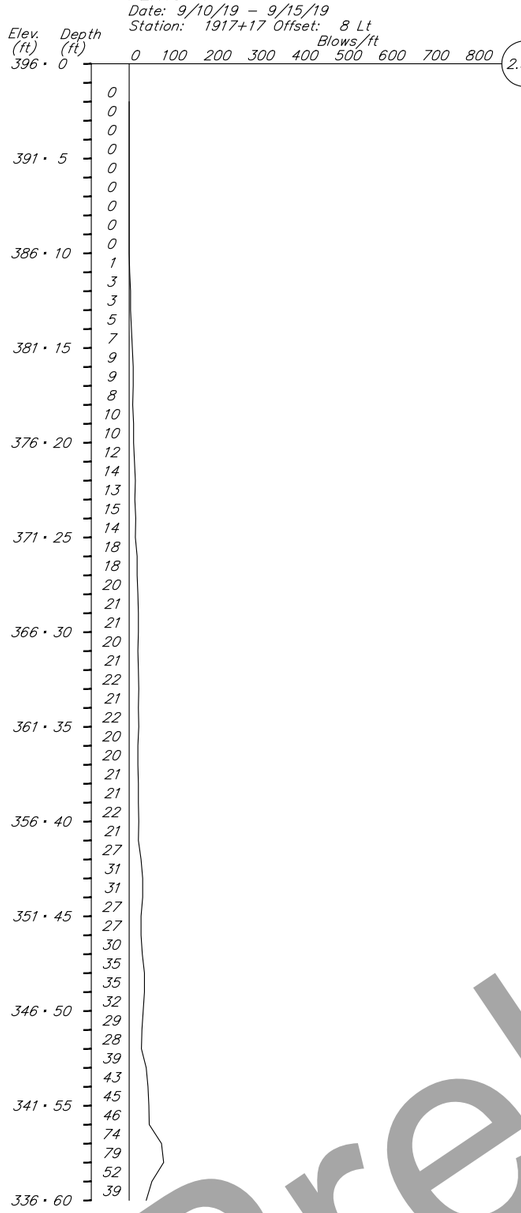

PEN19–4 (cont)

Date: 9/10/19 – 9/15/19
Station: 1917+17 Offset: 8 Lt

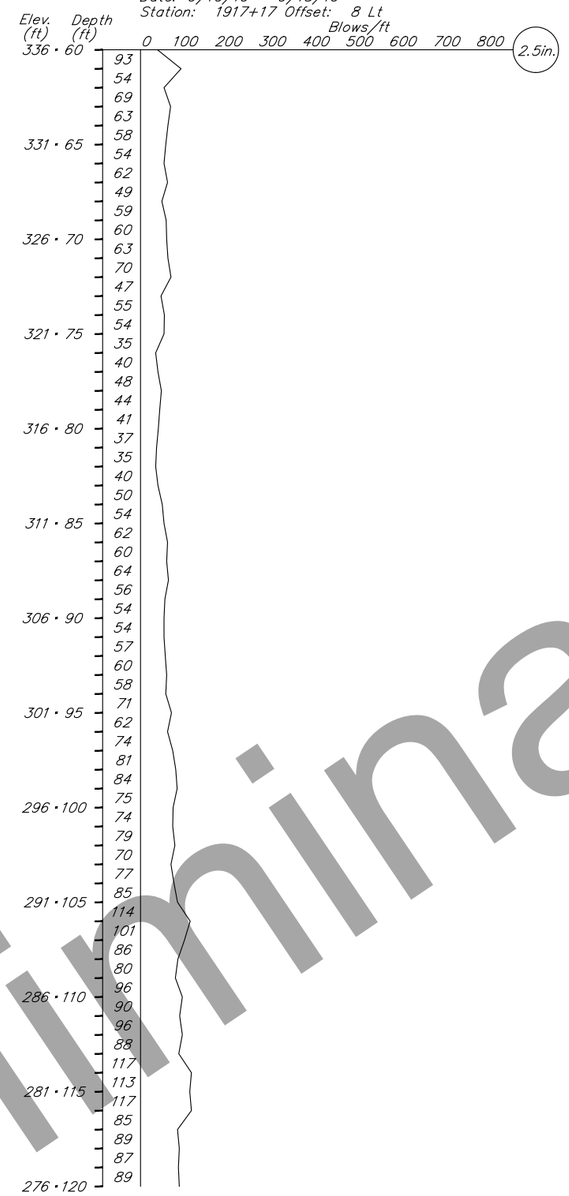

PEN19–4 (cont)

Date: 9/10/19 – 9/15/19
Station: 1917+17 Offset: 8 Lt

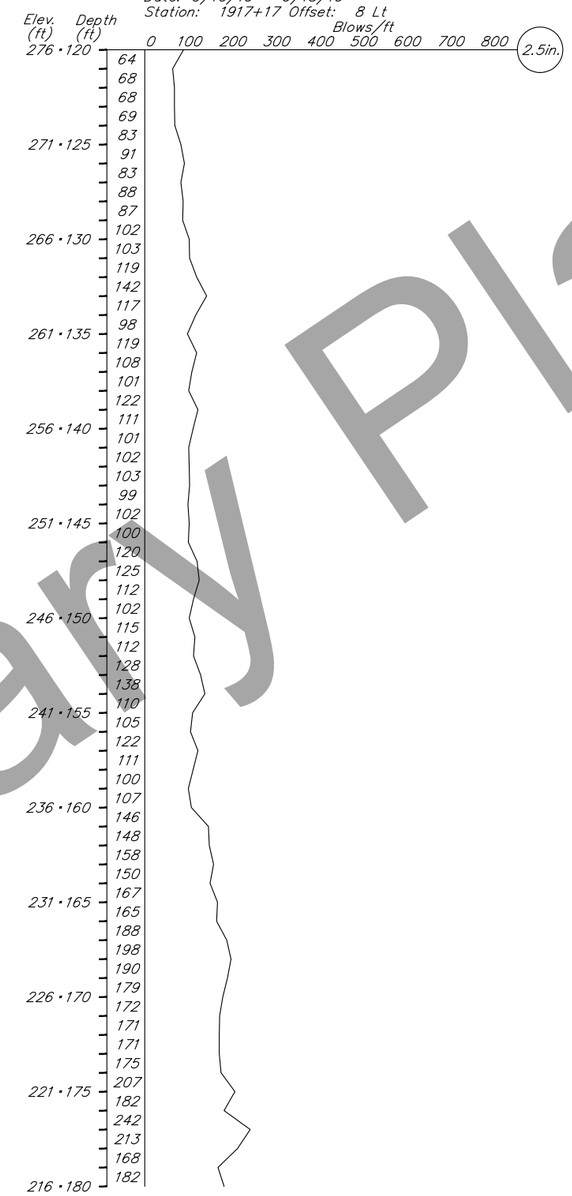

PEN19–4 (cont)

Date: 9/10/19 – 9/15/19
Station: 1917+17 Offset: 8 Lt

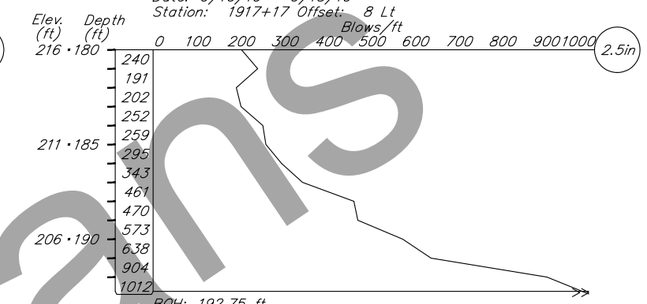

BOH: 192.75 ft
Notes: Abutment 2
Hammer: CME Auto Hammer 340 lb hammer
Equipment: CME 55 Truck
Drilling Method: Penetrometer
Geologist: J. SIMPSON
Latitude: −148.94464 Longitude: 64.66503

Preliminary Plans

DESIGNED BY: D. Hemstreet	CHECKED: Engineer		
DRAWN BY: R. Angell	CHECKED: J. Nicolazzo		
QUANTITIES BY: Engineer	CHECKED: Engineer		

STATE OF ALASKA
DEPARTMENT OF TRANSPORTATION AND PUBLIC FACILITIES
STATEWIDE MATERIALS

LITTLE GOLDSTREAM BRIDGE

PARKS HIGHWAY

TEST HOLE & PENETROMETER LOGS

BRIDGE NO. 0678
DWG. NO. 19

H:\Projects\Parks_Hwy\60657_Parks_305_325\Bridge\Drafting\678_GEO,-5 PEN19-4 Apr 14, 2020 – 7:11am

STATE	PROJECT DESIGNATION	YEAR	SHEET NO.	TOTAL SHEETS
ALASKA	NFHWY00476	2020	N20	N21

TH19-5

Date: 9/11/19 – 9/20/19
Station: 1917+17 Offset: 11 Rt

Tri-cone & Casing

Elev. (ft)	Depth (4 in.)	Description
395	0.0	Asphalt
	0.5	SAND with Gravel (FILL) (SW) brown to gray, well-graded, dry to moist, 1.5"–
	2.5	SANDY SILT with Gravel (FILL) (ML) tan, moist, 1"–, micaceous schist fill
390		16 — 19-4402 SPT — decrease in gravel; 19-4402 Moisture=15%
	8.8	SILT (ML) brown, moist to wet, trace Organics present
385		14 — 19-4403 SPT — 19-4403 p200=89.4%, Sa=11%, Gr=0%, PI=NP, LL=NV, ML; slight increase in Organics
380		8 — 19-4404 SPT — 19-4404 p200=84.2%, Sa=16%, Gr=0%, PI=NP, LL=NV, ML
375		9 — 19-4405 SPT — 19-4405 p200=85.3%, Sa=15%, Gr=0%, PI=NP, LL=NV, ML; Organics present
	23.5	SILT with Sand (ML) brown, Organics present
370		12 — 19-4406 SPT — 19-4406 p200=83.2%, Sa=17%, Gr=0%, Moisture=30.9%, Org=1.7%, PI=NP, LL=NV, ML
365		6 — 19-4407 SPT — 19-4407 p200=81.5%, Sa=19%, Gr=0%, PI=NP, LL=NV, ML
360		8 — SPT — brown to tan
355		11 — SPT — brown
	43.5	SILT (ML) brown to tan, some oxidation
350		11 — 19-4408 SPT — 19-4408 p200=88.1%, Sa=12%, Gr=0%, PI=NP, LL=NV, ML; thin sandy layer
345		10 — 19-4409 SPT — gray to brown, some oxidation; 19-4409 p200=93.0%, Sa=7%, Gr=0%, PI=NP, LL=NV, ML
340	54.0 9/11/19	trace Organics present
	57.0	SAND with Silt (SP-SM) gray to brown, poorly-graded, fine grained sand, trace Organics present (cont.)
335		

TH19-5 (cont)

Date: 9/11/19 – 9/20/19
Station: 1917+17 Offset: 11 Rt

Tri-cone & Casing

Elev. (ft)	Depth (4 in.)	Description
335		26 — 19-4410 SPT — 19-4410 p200=11.5%, Sa=89%, Gr=0%, PI=NP, LL=NV, SP-SM; 19-4411 — 19-4411 Moisture=21.3%, Org=0.3%; slightly coarser sand
	65.0	SAND with Gravel (SP) gray, poorly-graded
330		21 — 19-4412 SPT — fine gravel 1"–, coarse grained sand; 19-4412 p200=3.2%, Sa=73%, Gr=19%, PI=NP, LL=NV, SP; medium to coarse grained sand, gravelly layers
325		23 — 19-4413 SPT — finer gravel 1"–; 19-4413 p200=3.2%, Sa=64%, Gr=24%, PI=NP, LL=NV, SP
320		15 — 19-4414 SPT — 19-4414 p200=3.3%, Sa=61%, Gr=23%, Moisture=11.4%, PI=NP, LL=NV, SP
315		
310		
305		
300		
	97.0	SAND with Silt (SP-SM) gray, poorly-graded; fine grained sand liquefies when agitated
295		28 — 19-4415 SPT — 19-4415 p200=8.2%, Sa=92%, Gr=0%, Moisture=21.4%, PI=NP, LL=NV, SP-SM
290		1' slightly coarser sand layer
285		39 — SPT — no recovery,
280		
	117.5	SAND with Gravel (SP) gray, poorly-graded, 1"–
275		

TH19-5 (cont)

Date: 9/11/19 – 9/20/19
Station: 1917+17 Offset: 11 Rt

Tri-cone & Casing

Elev. (ft)	Depth (4 in.)	Description
275		19 — 19-4416 SPT — 19-4416 p200=3.4%, Sa=59%, Gr=24%, PI=NP, LL=NV, SP; Organics layer; Organics present; thicker gravelly layer
	128.0	SILT (ML) brown to gray, Organics present
270		28 — 19-4417 19-4418 SPT — 19-4417 p200=96.7%, Sa=3%, Gr=0%, Moisture=38.3%, Org=1.8%, PI=NP, LL=NV, ML; 19-4418 p200=88.6%, Sa=11%, Gr=0%, Moisture=35%, Org=1.9%, PI=NP, LL=NV, ML; Organics layer
265		
	135.0	SAND with Gravel (SW) gray, well-graded, subrounded to rounded gravel 1"–
260		
255		32 — SPT
250		21" of heave after driving casing; finer sand; too much heave when SPT attempted
245		
240		23 — SPT — subangular to subrounded gravel to 1/2", coarse grained sand
235		
230		
225		45 — SPT — 1 foot heave when SPT taken no recovery
	172.0	Organics layer
220		77 — 19-4442 SPT — SAND with Silt and Gravel (SP-SM) gray, poorly-graded, fine grained sand, trace Organics present; 19-4442 p200=9.2%, Sa=66%, Gr=23%, Moisture=10.4%, Org=0.1%, PI=NP, LL=NV, SP-SM; gravelly layer
	178.5	SILTY SAND with Gravel (SM) gray,
215		19-4443 — trace Organics present

TH19-5 (cont)

Date: 9/11/19 – 9/20/19
Station: 1917+17 Offset: 11 Rt

Tri-cone & Casing

Elev. (ft)	Depth (4 in.)	Description
215		80 — SPT — 19-4443 p200=13.8%, Sa=69%, Gr=16%, Moisture=16.1%, Org=1%, PI=NP, LL=NV, SM; gravelly layer
	184.0	SILT (ML) gray, Organics present
210		61 — 19-4444 SPT — 19-4444 p200=95.7%, Sa=4%, Gr=0%, Moisture=40%, Org=3.6%, PI=NP, LL=NV, ML; brown
205		44 — 19-4445 SPT — brown to gray; 19-4445 p200=88.6%, Sa=10%, Gr=0%, Moisture=41.6%, Org=4.9%, PI=NP, LL=NV, ML
	193.5	

B.O.H. 193.5 ft.
Notes: Abutment 2
Hammer: CME Auto Hammer
Equipment: CME 55 Truck
Drilling Method: Tricone
Geologist: J. SIMPSON
Latitude: –148.94464 Longitude: 64.66509

Preliminary Plans

DESIGNED BY: D. Hemstreet	CHECKED: Engineer	STATE OF ALASKA DEPARTMENT OF TRANSPORTATION AND PUBLIC FACILITIES STATEWIDE MATERIALS	LITTLE GOLDSTREAM BRIDGE PARKS HIGHWAY TEST HOLE & PENETROMETER LOGS
DRAWN BY: R. Angell	CHECKED: J. Nicolazzo		BRIDGE NO. 0678
QUANTITIES BY: Engineer	CHECKED: Engineer		DWG. NO. 20

H:\Projects\Parks_Hwy\60657_Parks_305_325\Bridge\Drafting\678_GEO_-6 TH19-5 Apr 14, 2020 – 7:12am

STATE	PROJECT DESIGNATION	YEAR	SHEET NO.	TOTAL SHEETS
ALASKA	NFHWY00476	2020	N21	N21

TH19–6

Date: 9/14/19 – 9/14/19
Station: 1917+67 Offset: 6 Lt

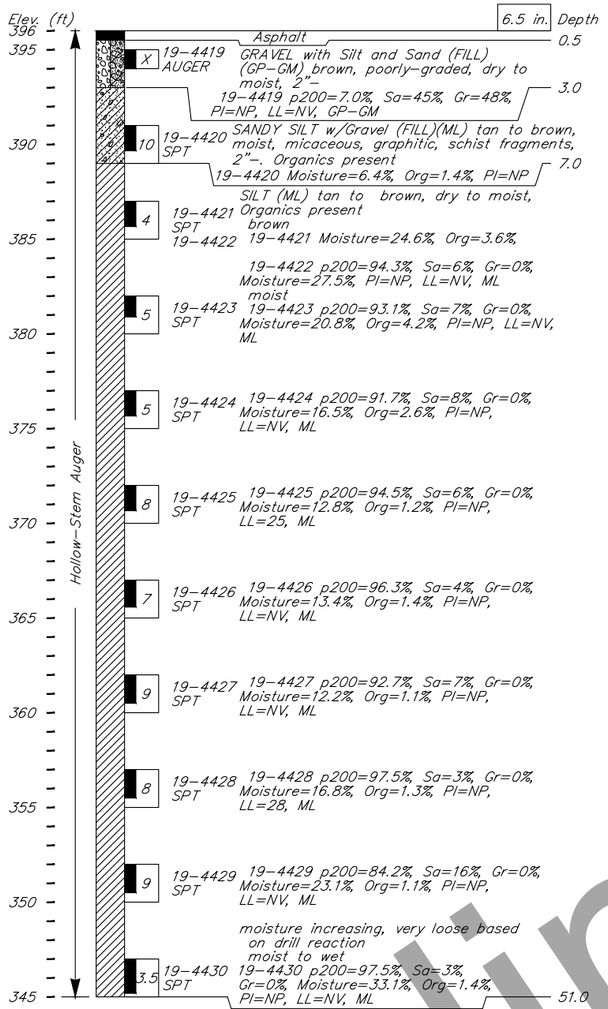

B.O.H. 51 ft.
Notes: Approach 2
Hammer: CME Auto Hammer
Equipment: CME 55 Truck
Drilling Method: 6.5" Hollow Auger
Geologist: J. SIMPSON
Latitude: –148.94481 Longitude: 64.66492

Preliminary Plans

DESIGNED BY: D. Hemstreet	CHECKED: Engineer		
DRAWN BY: R. Angell	CHECKED: J. Nicolazzo		
QUANTITIES BY: Engineer	CHECKED: Engineer		

STATE OF ALASKA
DEPARTMENT OF TRANSPORTATION AND PUBLIC FACILITIES
STATEWIDE MATERIALS

LITTLE GOLDSTREAM BRIDGE

PARKS HIGHWAY

TEST HOLE & PENETROMETER LOGS

BRIDGE NO. 0678
DWG. NO. 21

H:\Projects\Parks_Hwy\60657_Parks_305_325\Bridge\Drafting\678_GEO_-7 TH19-6 Apr 14, 2020 – 7:12am

NO.	DATE	REVISION

STATE	PROJECT DESIGNATION	YEAR	SHEET NO.	TOTAL SHEETS
ALASKA	PENDING/NFHWY00476	2020	Q1	Q2

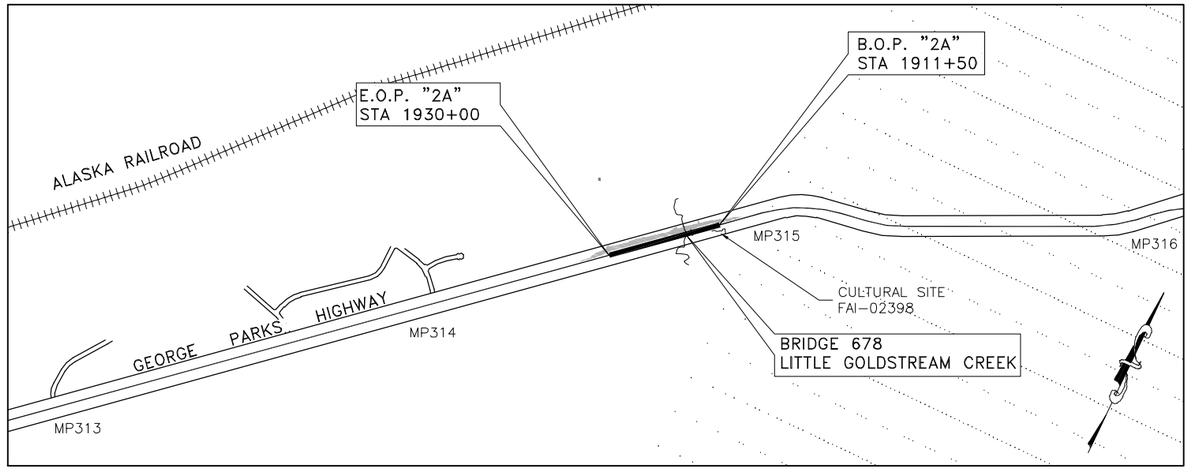

VICINITY MAP

ESCP GENERAL NOTES:

GENERAL:

1. READ AND COMPLY WITH THE ADEC CONSTRUCTION GENERAL PERMIT (CGP) AND SECTION 641 OF THE PROJECT SPECIFICATIONS.
2. INITIATE EROSION AND SEDIMENT CONTROLS PRIOR TO ANY EARTH DISTURBING ACTIVITIES.
3. THE CONTRACTOR MUST PROVIDE EROSION AND SEDIMENT CONTROL (ESC) MEASURES IN ACCORDANCE WITH THEIR SWPPP (STORM WATER POLLUTION PREVENTION PLAN).
4. ALL DISTURBED GROUND CAPABLE OF SUPPORTING VEGETATION MUST BE RE-VEGETATED FOR FINAL STABILIZATION. FINAL STABILIZED AREAS NOT RE-VEGETATED MUST BE 100% COVERED BY ROCK OR OTHER PERMANENT NON-ERODIBLE MATERIAL. ATTAINMENT OF FINAL STABILIZATION WILL BE AS APPROVED IN THE FIELD BY THE ENGINEER.
5. STOCKPILE AND STAGING LOCATIONS MUST BE RECLAIMED TO THEIR ORIGINAL CONDITION AS APPROVED BY THE ENGINEER.
6. TEMPORARY BMP'S REQUIRED BY THIS ESCP WILL NOT BE MEASURED FOR PAYMENT AND ARE SUBSIDIARY TO PAY ITEM 641.0003.0000.
7. EXISTING GROUND CONTOURS ARE DISPLAYED AT 2' MINOR AND 10' MAJOR INTERVALS.
8. STABILIZE THE TEMPORARY DIVERSION TO PREVENT EROSION AND SEDIMENT TRANSPORT.

CULVERTS:

9. PROVIDE TEMPORARY INLET AND OUTLET PROTECTION FOR ALL CULVERTS (EXISTING AND PROPOSED) IN THE AREA OF DISTURBANCE PRIOR TO MAKING THEM OPERATIONAL OR BEGINNING EARTH DISTURBING ACTIVITIES.
10. PERMANENT CULVERT INLET AND OUTLET PROTECTION IS ESTABLISHED VEGETATION UNLESS OTHERWISE NOTED IN PLANS.

DITCH PROTECTION AND CONCENTRATED FLOWS:

11. DURING CONSTRUCTION, PROTECT DITCHES TO LIMIT RELEASE OF SEDIMENT. PROVIDE TEMPORARY DITCH PROTECTION IN THE FORM OF VELOCITY CONTROLS OR TEMPORARY NON-ERODIBLE LINING.
12. EXPOSED MATERIAL OF NEW DITCHES CAPABLE OF SUPPORTING VEGETATION MUST BE SEEDED PER THE PLANS FOR FINAL STABILIZATION.
13. WHEN POSSIBLE, AVOID CONDITIONS WHICH PROMOTE CONCENTRATED FLOWS. OTHERWISE, INSTALL VELOCITY CONTROLS BMP'S (I.E, WATTLE CHECK DAMS OR ROCK CHECK DAMS) OR NON-ERODIBLE CHANNEL LINING (I.E. DITCH LINING).

HAULING:

14. ENSURING LOADS ARE STABLE OR COVERED SO THAT NO MATERIAL ESCAPEMENT OCCURS DURING HAULING ACTIVITIES.
15. STABILIZED CONSTRUCTION EXITS MUST BE SWEPT CLEAN EACH SHIFT OR AS DIRECTED BY THE ENGINEER.

STOCKPILE PROTECTION:

16. ALL ERODIBLE STOCKPILES MUST BE CONTROLLED BY EROSION AND SEDIMENT CONTROL DEVICES.
17. EROSION AND SEDIMENT CONTROL BMP'S MAY HAVE TO BE REMOVED AND RE-INSTALLED EACH SHIFT.
18. COVER MUST BE USED ON STOCKPILES IN ACCORDANCE WITH SUBSECTION 641-3.01.5 TO PROVIDE ADDITIONAL EROSION PROTECTION.
19. LIMIT STOCKPILING OF NATIVE TOPSOIL/ORGANICS FROM GRUBBING ACTIVITIES TO SHALLOW 3-FT HIGH BERMS.

TIMING OF BMP INSTALLATION:

20. INSTALL EROSION AND SEDIMENT CONTROL BMP'S PRIOR TO THE START OF CONSTRUCTION, AS NECESSARY TO MINIMIZE EROSION FROM DISTURBED SURFACES AND CAPTURE SEDIMENT ONSITE.
21. INSTALL TEMPORARY PERIMETER CONTROL BMP'S BEFORE ANY UP-GRADIENT SOIL DISTURBANCE OCCURS.
22. START PLACEMENT OF DITCH LINING OR OTHER DISSIPATION MEASURES WITHIN 24 HOURS OF PLACEMENT OF THE CULVERT AND COMPLETED IN ONE CONTINUOUS OPERATION.

ENVIRONMENTAL INFORMATION:

- RECEIVING WATER BODIES: LITTLE GOLDSTREAM CREEK, WETLANDS
- IMPAIRED WATER BODIES: N/A
- TOTAL MAXIMUM DAILY LOAD (TMDL) WATERS: N/A
- THREATENED AND ENDANGERED SPECIES: N/A
- HISTORIC PLACES: FAI-02398, SEE CATEGORICAL EXCLUSION FOR ENVIRONMENTAL COMMITMENTS.
- MIGRATORY BIRD TREATY: ALL CONSTRUCTION ACTIVITIES SHALL COMPLY WITH THE MIGRATORY BIRD TREATY ACT TO PREVENT THE KILLING OR TAKING OF MIGRATORY BIRDS OR ANY PART, NEST, OR EGG OF ANY SUCH BIRDS. ADDITIONAL INFORMATION MAYBE FOUND IN THE US FISH & WILDLIFE SERVICE'S "LAND CLEARING TIMING GUIDANCE FOR ALASKA." FOR THIS PROJECT.
- REFER TO APPENDIX A FOR PROJECT SPECIFIC PERMITS AND ENVIRONMENTAL COMMITMENTS.

PROJECT SITE SPECIFIC CONDITIONS:

- SITE FUNCTION: HIGHWAY
- MEAN ANNUAL PRECIPITATION: 10.76 INCHES (SOURCE: WESTERN REGIONAL CLIMATE CENTER WEBSITE FOR NENANA)
- 2-YEAR 24-HOUR PRECIPITATION: 1.21 INCHES (SOURCE: HTTPS://HDSC.NWS.NOAA.GOV/HDSC/PFDS/PFDS_MAP_AK.HTML)
- LANDSCAPE TOPOGRAPHY: MODERATE TO DENSE FOREST WITH GENTLE SLOPES AVERAGING 5 TO 10 PERCENT
- EVIDENCE OF HISTORIC CONTAMINATION: NONE WITHIN 1500 FEET

PROJECT AREA SUMMARY

PROJECT AREA	DISTURBED AREA	PRE-CONSTRUCTION IMPERVIOUS AREA	POST-CONSTRUCTION IMPERVIOUS AREA	PRE-CONSTRUCTION RUNOFF COEFFICIENT	POST-CONSTRUCTION RUNOFF COEFFICIENT
12.8 ACRES	3.5 ACRES	3.0 ACRES (47%)	3.0 ACRES (47%)	0.76	0.76

LEGEND

PERIMETER PROTECTION —P—P—P—P—P—
INLET/OUTLET PROTECTION
DRAINAGE DIRECTION
DRAINAGE SWALE
WETLANDS
10' CONTOURS
2' CONTOURS

EROSION SEDIMENT CONTROL PLAN 1 OF 2

Preliminary Plans

PLANS DEVELOPED BY: MICHAEL BAKER INTERNATIONAL, AECC103, 3900 C STREET SUITE 900, ANCHORAGE, AK 99503 (907) 273-1600
T:\AKDOT\148830 - DOT&PF Parks 305-325 PI\04 CADD\LGS PS&E\60657_ESCP_LGS-TITLE Thu, Jul/23/20 11:54am

NO.	DATE	REVISION

STATE	PROJECT DESIGNATION	YEAR	SHEET NO.	TOTAL SHEETS
ALASKA	PENDING/NFHWY00476	2020	Q2	Q2

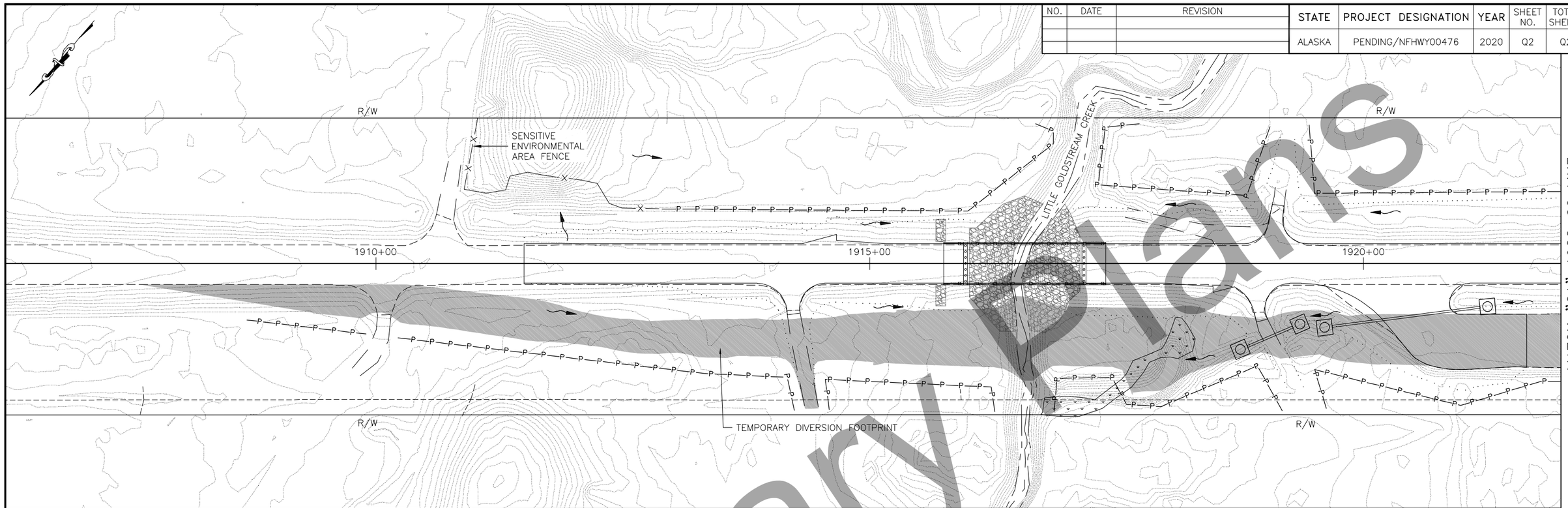

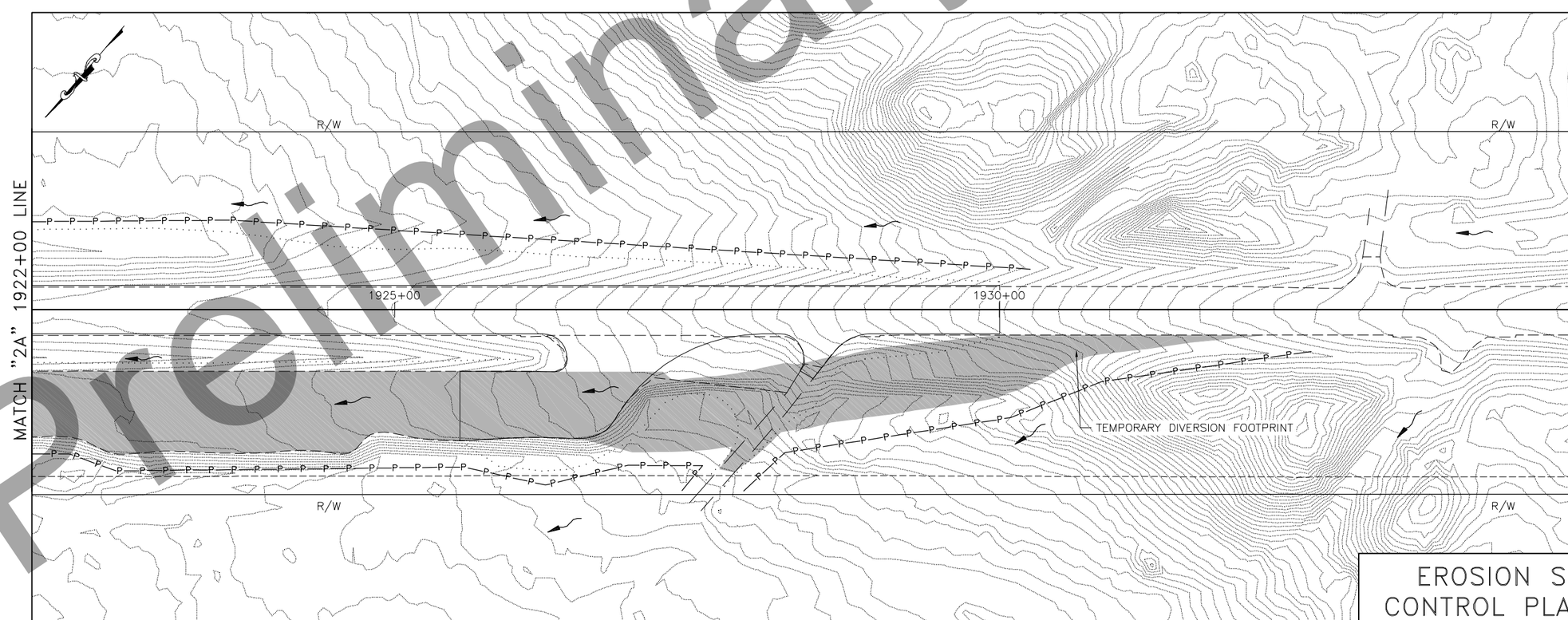

EROSION SEDIMENT CONTROL PLAN 2 OF 2

Preliminary Plans

PLANS DEVELOPED BY: MICHAEL BAKER INTERNATIONAL, AECC103, 3900 C STREET SUITE 900, ANCHORAGE, AK 99503 (907) 273-1600
T:\AKDOT\148830 - DOT&PF Parks 305-325 PI\04 CADD\LGS PS&E\60657_ESCP_LGS-ESCP PLAN Thu, Jul/23/20 11:54am

NO.	DATE	REVISION	STATE	PROJECT DESIGNATION	YEAR	SHEET NO.	TOTAL SHEETS
			ALASKA	PENDING/NFHWY00476	2020	T1	T3

NOTES:

1. THIS TRAFFIC CONTROL PLAN IS A SCHEMATIC AND MAY VARY DEPENDING ON ACTUAL FIELD CONDITIONS. MODIFY AND ADJUST DISTANCES SHOWN ACCORDING TO SITE CONDITIONS.
2. MOUNT CONSTRUCTION SIGNS AT 7' HEIGHT ON 4" X 4" WOOD POST IN ACCORDANCE WITH STANDARD PLANS S-05.01 AND S-30.04 UNLESS OTHERWISE DIRECTED BY THE ENGINEER.
3. TERMINATE PRECAST CONCRETE BARRIER WITH NCHRP TL-3 CRASH CUSHIONS.
4. MAINTAIN A MINIMUM OF 11' LANES IN EACH DIRECTION OPEN TO THE PUBLIC. PROVIDE ACCESS TO EMERGENCY VEHICLES THROUGH THE PROJECT AT ALL TIMES. PROVIDE ACCESS FOR PERMITTED OVERSIZE VEHICLES. SEE SECTION 643.
5. ALL DEVICES AND BARRIERS SHOWN ARE SUBSIDIARY TO PAY ITEM 643.0002.0000, TRAFFIC MAINTENANCE. SIGNS SHOWN ARE SUBSIDIARY TO PAY ITEM 643.0003.0000 PERMANENT CONSTRUCTION SIGNS.
6. PROVIDE TEMPORARY STRIPING AND BARRIERS OR GUARDRAIL FOR TEMPORARY CROSSING AS SHOWN. STRIPING AND BARRIERS OR GUARDRAIL IS SUBSIDIARY TO PAY ITEM 520.0001.0000.

LEGEND:

- F-SHAPE BARRIER OR GUARDRAIL
- TYPE III BARRICADE
- CONSTRUCTION SIGN

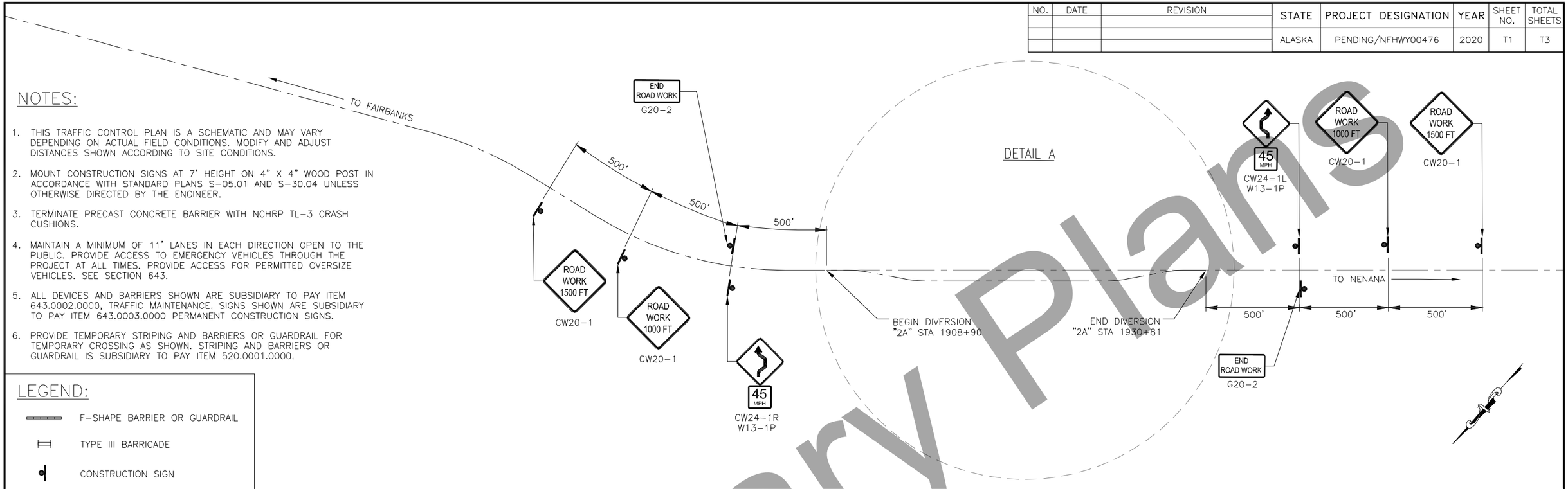

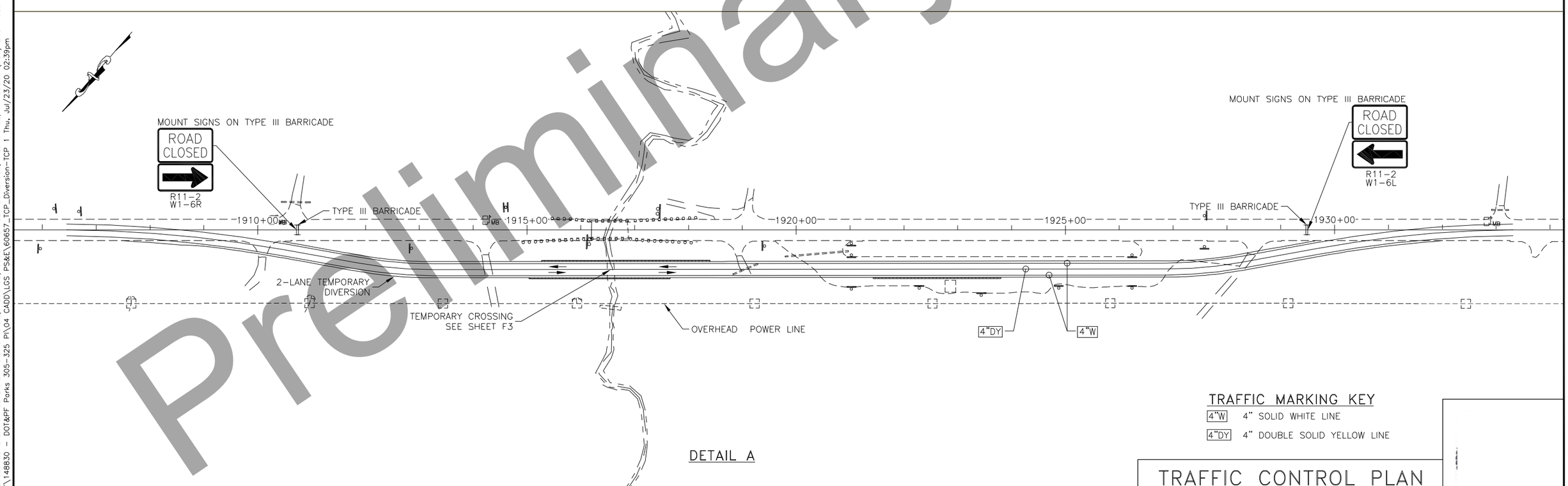

DETAIL A

TRAFFIC MARKING KEY

4"W 4" SOLID WHITE LINE

4"DY 4" DOUBLE SOLID YELLOW LINE

TRAFFIC CONTROL PLAN
TEMPORARY DIVERSION

Preliminary Plans

PLANS DEVELOPED BY: MICHAEL BAKER INTERNATIONAL, AECC103, 3900 C STREET SUITE 900, ANCHORAGE, AK 99503 (907) 273-1600
T:\AKDOT\148830 - DOT&PF Parks 305-325 PI\04 CADD\LGS PS&E\60657_TCP_Diversion-TCP 1 Thu, Jul/23/20 02:39pm

NO.	DATE	REVISION

STATE	PROJECT DESIGNATION	YEAR	SHEET NO.	TOTAL SHEETS
ALASKA	PENDING/NFHWY00476	2020	T2	T3

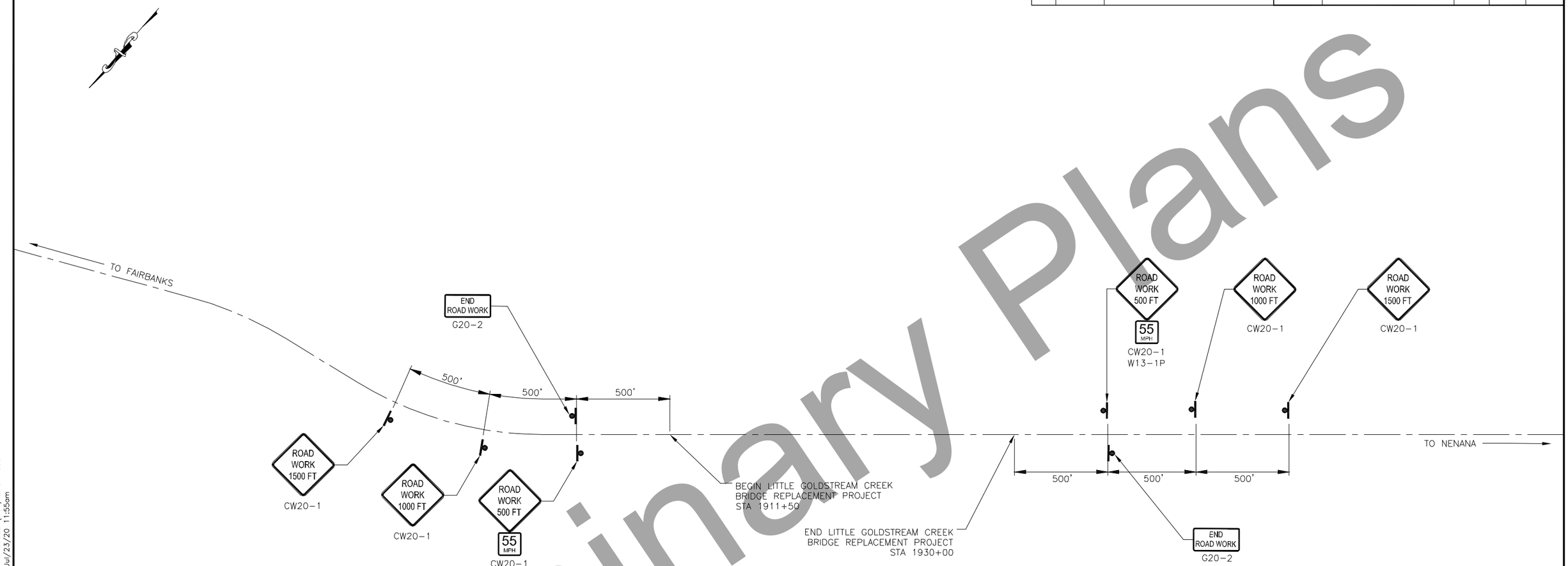

Preliminary Plans

TRAFFIC CONTROL PLAN

PLANS DEVELOPED BY: MICHAEL BAKER INTERNATIONAL, AECC103, 3900 C STREET SUITE 900, ANCHORAGE, AK 99503 (907) 273-1600
T:\AKDOT\148830 - DOT&PF Parks 305-325 PI\04 CADD\LGS PS&E\60657_TCP_Diversion-TCP 2 Thu, Jul/23/20 11:55am

NO.	DATE	REVISION

STATE	PROJECT DESIGNATION	YEAR	SHEET NO.	TOTAL SHEETS
ALASKA	PENDING/NFHWY00476	2020	T3	T3

VERTICAL DROP-OFFS

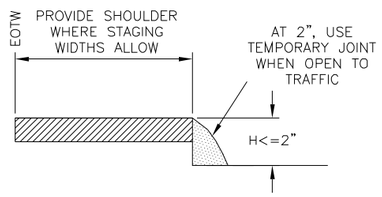

CASE A

DROP-OFFS ≤2 INCHES
(PAVED SURFACES ONLY)

1. USE "UNEVEN LANES" (CW8-11) SIGNS FOR ALL DROP-OFFS IN BETWEEN TRAFFIC LANES.
2. LEAVE NO DROP-OFFS > 1.5" IN THE TRAFFIC LANE OR ACTIVE WHEEL TRACK.

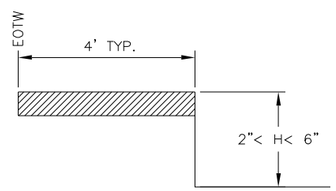

CASE B

2"< DROP-OFFS < 6"
(ALL ROADWAY SURFACES)

1. PLACE CONES OR CANDLES FOR DROP-OFFS ≥ 4 FEET AND ≤ 30 FEET FROM THE EOTW.
2. USE DRUMS OR TYPE II BARRICADES FOR DROP-OFFS < 4 FEET FROM THE EOTW.

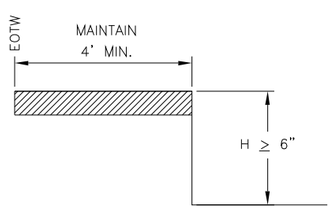

CASE C

DROP-OFFS ≥6"
(ALL ROADWAY SURFACES AND ROADSIDE SLOPES)

1. PLACE DRUMS OR TYPE II BARRICADES FOR DROP-OFFS ≤ 24" WITHIN THE CLEAR AREA.
2. PROVIDE PORTABLE CONCRETE BARRIER FOR DROP-OFFS >24" WITHIN 15 FEET OF THE EOTW. USE DRUMS OR TYPE II BARRICADES IF BEYOND 15 FEET.

FILL SLOPES

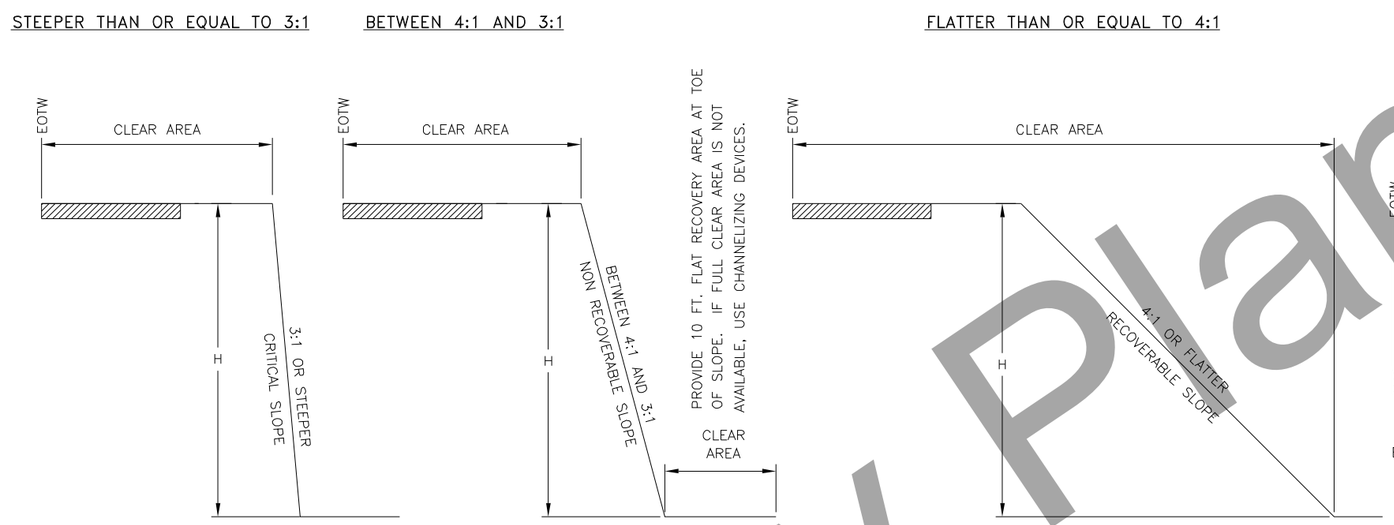

CUT SLOPES

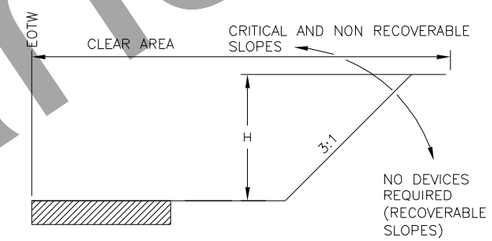

EOTW = EDGE OF TRAVELED WAY

CLEAR AREA REQUIREMENTS

	LOW SPEED < = 35 MPH	INTERMEDIATE SPEED 40 MPH TO 45 MPH	HIGH SPEED ≥ = 50 MPH
RURAL	15'	24'	30'
URBAN	10' DITCH SECTIONS, OR 2' BEHIND CURB	15' DITCH CONDITIONS, OR 2' BEHIND CURB	15' DITCH CONDITIONS, OR 2' BEHIND CURB

CHANNELIZING DEVICE REQUIREMENTS FOR SLOPES 3:1 OR STEEPER WITHIN THE CLEAR AREA

	H <= 15'	H > 15'
< 2000 VPD LOW VOLUME	CANDLES OR CONES	TYPE II BARRICADES OR DRUMS
> 2000 VPD	TYPE II BARRICADE OR DRUMS	PORTABLE CONCRETE BARRIER OR TEMPORARY GUARDRAIL

TRAFFIC CONTROL NOTES:

1. USE THE EXISTING CROSS-SECTION (PRIOR TO CONSTRUCTION) AS A BASIS FOR DETERMINING WHEN CHANNELIZING DEVICES ARE NEEDED.
2. INSTALL CHANNELIZING DEVICES WHEN THE HORIZONTAL OR VERTICAL CURVATURE IS MADE MORE SEVERE.
3. INSTALL FLEXIBLE DELINEATORS WHEN ALL VEGETATION OVER 4 FEET HIGH IS CLEARED FROM FILL SLOPES THAT ARE 3:1 OR STEEPER IN THE CLEAR AREA.
4. USE PORTABLE CONCRETE BARRIER FOR WARRANTING CONDITIONS WHICH LAST LONGER THAN 3 DAYS. FOR CONDITIONS LASTING LESS THAN 3 DAYS, OTHER CHANNELIZING DEVICES MAY BE INSTALLED.
5. TERMINATE RUNS OF PORTABLE CONCRETE BARRIER USING THE FOLLOWING METHODS:
   - A) CONNECT TO A PORTABLE CRASH CUSHION, OR
   - B) PROVIDE A CONCRETE BARRIER WITH THRIE BEAM TRANSITION TO W-BEAM GUARDRAIL, TREATED WITH A PARALLEL TERMINAL (SEE SECTION 710).
   - C) FLARE THE ENDS OF THE PORTABLE CONCRETE BARRIER AWAY FROM THE ROADWAY AT A RATE OF 7:1 ON A COMPACTED SLOPE OF 6:1 OR FLATTER, OUTSIDE OF THE CLEAR AREA. INSTALL A SLOPING PORTABLE CONCRETE BARRIER END TREATMENT, OR
   - D) BURY IN THE BACKSLOPE.
6. TERMINATE THE RUNS OF TEMPORARY W-BEAM GUARDRAIL USING THE FOLLOWING METHODS:
   - A) PROVIDE A PARALLEL TERMINAL (SEE SECTION 710)
   - B) FLARE THE ENDS OF THE TEMPORARY GUARDRAIL AWAY FROM THE ROADWAY AT A RATE OF 6:1 ON A COMPACTED SLOPE OF 6:1 OR FLATTER OUTSIDE OF THE CLEAR AREA, TERMINATE WITH A STANDARD W-BEAM END SECTION, OR
   - C) BURY IN THE BACKSLOPE.

EQUIPMENT NOTES:

1. WHEN THERE IS ACTIVE, NONMOBILE CONSTRUCTION EQUIPMENT WITHIN THE CLEAR AREA, DELINEATE THE ROADSIDE WITH TRAFFIC CONES.
2. SEPARATE PROCEDURES ARE REQUIRED FOR MOBILE WORK ZONE OPERATIONS AND SHORT DURATION WORK OF LESS THAN 12 HOURS.

WINTER SHUTDOWN NOTES:

1. WHEN REQUIRED, USE CHANNELIZING DEVICES WHICH CAN BE MAINTAINED OVER WINTER.
2. NO CHANNELIZING DEVICES ARE REQUIRED IF:
   - A) CONSTRUCTION SLOPES ARE RECOVERABLE, AND
   - B) SLOPES ARE SMOOTH AND COMPACTED, AND
   - C) REQUIRED CLEAR AREA IS PROVIDED

TRAFFIC CONTROL PLAN DETAILS

Preliminary Plans

PLANS DEVELOPED BY: MICHAEL BAKER INTERNATIONAL, AECC103, 3900 C STREET SUITE 900, ANCHORAGE, AK 99503 (907) 273-1600
T:\AKDOT\148830 - DOT&PF Parks 305-325 PI\04 CADD\LGS PS&E\60657_TRAFFIC CONTROL PLAN-TRAFFIC CONTROL PLAN Thu, Jul/23/20 11:55am

STATE	PROJECT DESIGNATION	YEAR	SHEET NO.	TOTAL SHEETS
ALASKA	PENDING/NFHWY00476	2020	V1	V32

C-04.12

SHEET 1 of 1

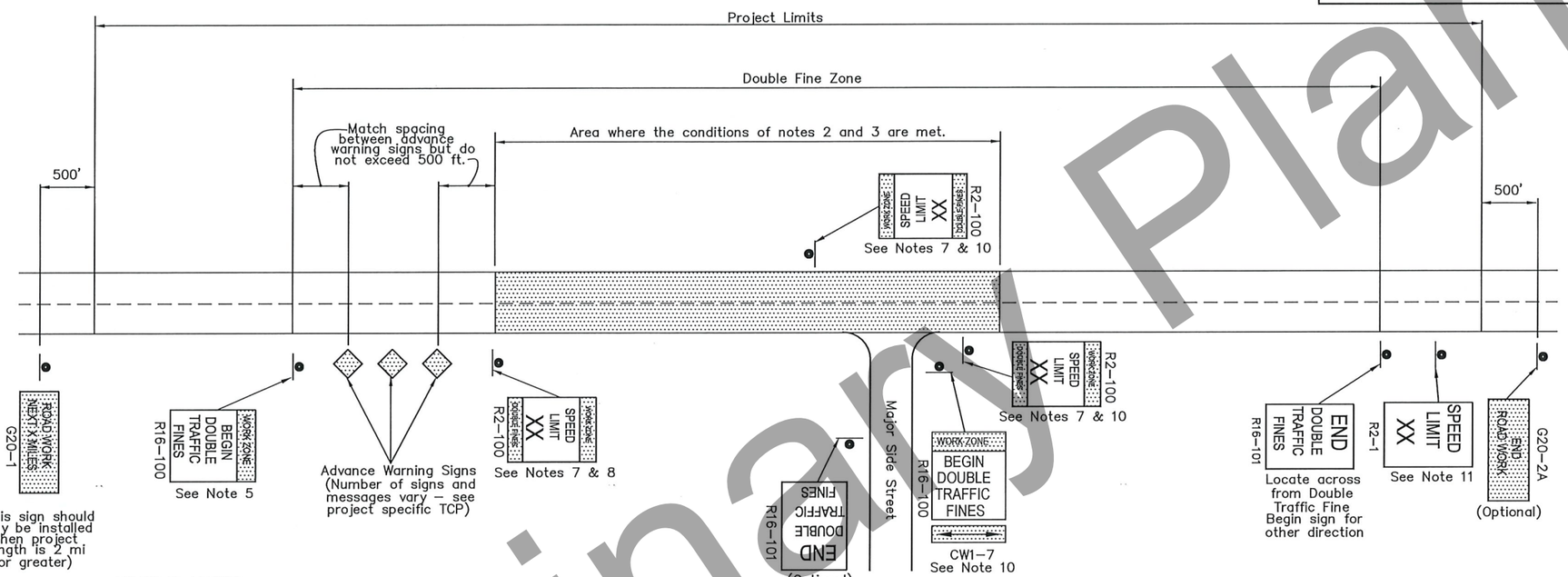

GENERAL NOTES

1. Signs are shown for one direction only (with one exception). Signs for the other direction mirror those shown.
2. Double fine signs shall be used only where one or more of the following conditions exist:
   a. Active work areas (where road workers and/or machines are presently working on or adjacent to a road)
   b. Detours on new temporary roads built for that purpose (this does not include detours on existing streets)
   c. Sections of paved roads where pavement has been removed.
   d. Roads being paved where unmatched asphalt lifts result in a vertical lip between lanes.
3. Double fine signs shall be confined to the areas where the above conditions exist, with the following exceptions:
   a. If the project is 2 miles or shorter in length, the entire project may be posted for double fines when the above conditions exist on any part of the project.
   b. When the above conditions exist at multiple locations separated by less than 2 miles, the locations and the intervening segments may be posted as a single double fine zone.
4. Double fine signs shall be removed or covered when work activity ceases for more than two days and conditions b, c, or d of note 2 are not met.
5. The R16-100 "BEGIN" sign may be used in place of the first advance warning sign. However, when this is done, the appropriate advance warning sign must be reinstalled when the double fine sign is taken down or covered.
6. When a double fine zone is longer than 2 miles, work zone speed limit signs shall be posted at spacings not greater than 2 miles within the double fine zone.
7. "Work zone speed limit signs", as used here, refer either to 1) R2-100 signs or 2) standard R2-1 regulatory speed limit signs with CW20-102 "DOUBLE FINES" plates mounted below.
8. The limit shown on work zone speed limit signs shall be either the existing limit before construction or, if a work zone speed limit order has been approved in accordance with ADOT&PF Procedure 05.05.020 PDR, a reduced limit.
9. All existing regulatory speed limit signs within double fine zones shall either be replaced with R2-100 signs or supplemented with CW20-102 plates.
10. Signs shall be installed at major intersections within the double fine zone to warn entering drivers of double fines. This may be done with a R16-100 sign with a CWI-7 arrow panel on the side street or with two work zone speed limit signs on the main street on either side of the intersection. Use of R16-100 signs on side streets eliminates the need for "Road Work Ahead" signs on those streets. If the speed limit has been reduced, the two work zone speed limit signs are mandatory.
11. At the end of each double fine zone, install an R2-1 sign showing the speed limit for the road beyond the double fine zone.

REVISIONS

Date	Description	By
6/11/99	Revised Notes	KJS
2/28/03	Rev. Notes & Sign No's	KJS

State of Alaska
Department of Transportation
& Public Facilities

LOCATION OF DOUBLE TRAFFIC FINE SIGNS

C-04.12

STANDARD PLAN C-04.12

Preliminary Plans

PLANS DEVELOPED BY: STATE OF ALASKA DEPARTMENT OF TRANSPORTATION & PUBLIC FACILITIES, NORTHERN REGION, 2301 PEGER ROAD, FAIRBANKS, AK 99709 (907)451-2200
R:\Projects\Drafting Special Projects\Working folder\HWY\Little Goldstream\00476_V-C0412 Wed, Jul/01/20 01:11pm

STATE	PROJECT DESIGNATION	YEAR	SHEET NO.	TOTAL SHEETS
ALASKA	PENDING/NFHWY00476	2020	V2	V32

C-05.20

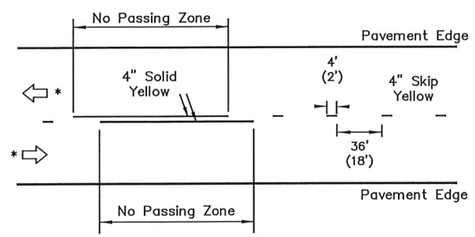

Striping

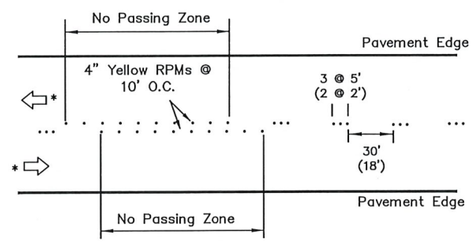

Temporary Raised Pavement Markers

DETAIL A

Two-lane road: No Passing Zones indicated with pavement markings.

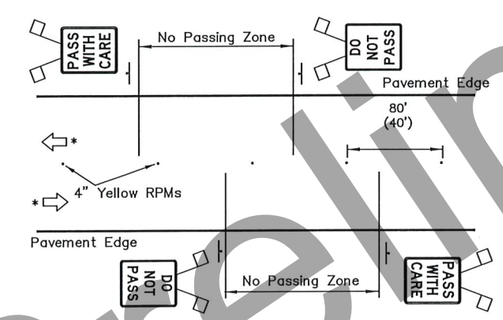

DETAIL B

Two-lane road: No Passing Zones indicated by signs only. Raised pavement markers for centerline delineation.

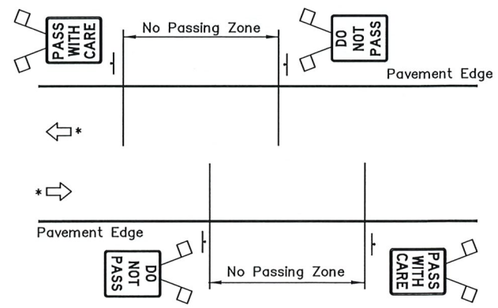

DETAIL C

Two-lane road: No Passing Zones indicated by signs only (see Note 2c). No centerline delineation.

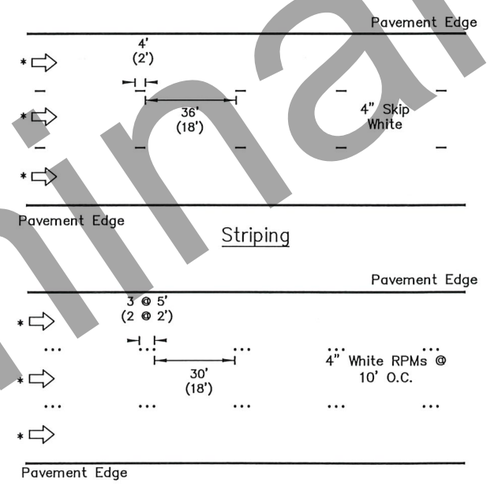

Striping

Temporary Raised Pavement Markers

DETAIL D

Multilane one-way road: Lane dividing lines

* Direction of Travel

GENERAL NOTES:

1. Final pavement markings conforming to Part 3 of the Alaska Traffic Manual should be installed before paved roads are open to public travel. If that is not practical, install interim pavement markings as shown on this drawing. Maintain interim pavement markings until final pavement markings are installed.

2. No interim pavement markings are required:
   a. on projects that will not have permanent markings when finished.
   b. in work zones that are open to public travel for no more than one work shift during daytime or for no more than one hour at night.
   c. where DO NOT PASS and PASS WITH CARE signs are installed on two lane roads as shown in Detail C, no pavement markings are required:
      1) for 3 days if seasonal ADT is above 2000, or
      2) for 1 month if seasonal ADT is below 2000.

3. Interim pavement markings should not be in place longer than 14 calendar days before being replaced with permanent markings conforming to Part 3 of the Alaska Traffic Manual unless the Engineer provides written approval.

4. Where R4-1 DO NOT PASS signs are used, install at the beginning of no passing zones and at no more than 1500' spacings within no passing zones.

5. Install high level warning devices on all DO NOT PASS and PASS WITH CARE signs.

6. Offset temporary markings 8"-12" from the future location of permanent markings if applied on the same lift of pavement.

7. Dimensions in parenthesis apply to curves with a radius of 1000 feet or less or where posted speed limit is 30 mph or less.

REVISIONS		
Date	Description	By
4/28/10	RPM spacing, signs	KJS

Sheet 1 of 1

State of Alaska
Department of Transportation
& Public Facilities

INTERIM
PAVEMENT MARKINGS

C-05.20

STANDARD PLAN C-05.20

Preliminary Plans

PLANS DEVELOPED BY: STATE OF ALASKA DEPARTMENT OF TRANSPORTATION & PUBLIC FACILITIES, NORTHERN REGION, 2301 PEGER ROAD, FAIRBANKS, AK 99709 (907)451-2200
R:\Projects\Drafting Special Projects\Working folder\HWY\Little Goldstream\00476_V1-c05.20 Wed, Jul/01/20 01:11pm

STATE	PROJECT DESIGNATION	YEAR	SHEET NO.	TOTAL SHEETS
ALASKA	PENDING/NFHWY00476	2020	V3	V32

D-01.02 SHEET 1 of 1

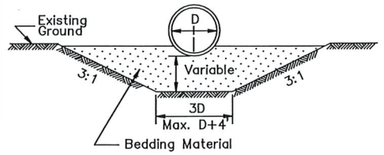

TYPE "A"
FOUNDATION STABILIZATION
To be used in unstable areas as directed by the Engineer.

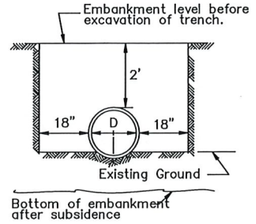

TYPE "B"

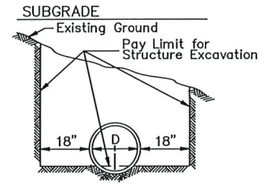

TYPE "C"

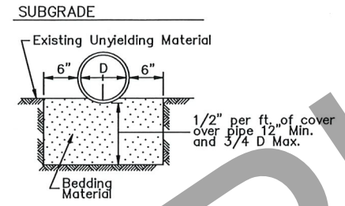

TYPE "D"
ROCK OR UNYIELDING MATERIAL

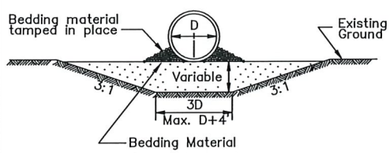

'ALTERNATE'
TYPE "A"
FOUNDATION STABILIZATION
To be used in unstable areas as directed by the Engineer.

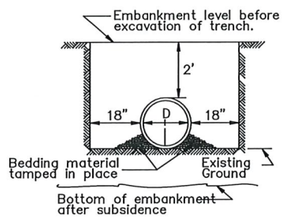

'ALTERNATE'
TYPE "B"

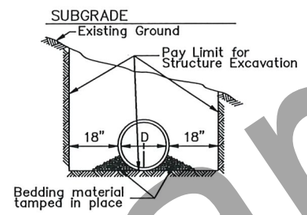

'ALTERNATE'
TYPE "C"

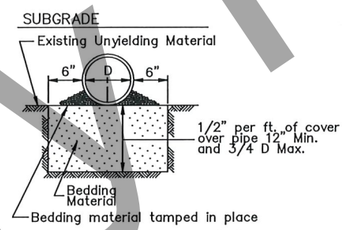

'ALTERNATE' TYPE "D"
ROCK OR UNYIELDING MATERIAL

D = Nominal Pipe Diameter

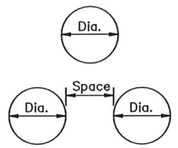

MULTIPLE INSTALLATIONS	
Dia.	Minimum Space Between Pipes
0" – 42"	24"
48" & Over	1/2 Dia. of pipe or 3', whichever is less.

S = Nominal Pipe Arch Span

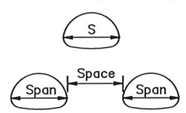

MULTIPLE INSTALLATIONS	
Dia.	Minimum Space Between Pipes
0" – 42"	24"
48" & Over	1/2 Span of pipe arch or 3', whichever is less.

CULVERT PIPE

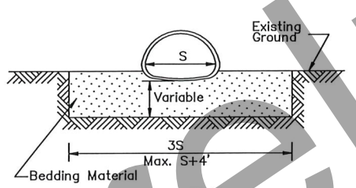

TYPE "A"
FOUNDATION STABILIZATION
To be used in unstable areas as directed by the Engineer.

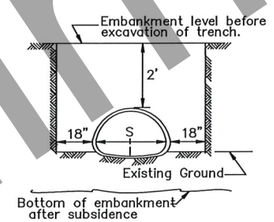

TYPE "B"

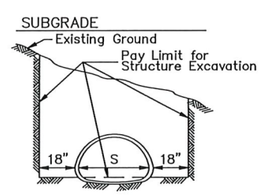

TYPE "C"

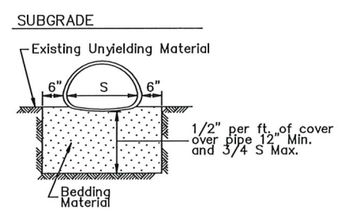

TYPE "D"
ROCK OR UNYIELDING MATERIAL

ARCH

GENERAL NOTES:

1. Sidefill shall be placed and compacted with care under haunches of pipe and shall be brought up evenly and simultaneously on both sides of pipe to 1 foot above the top of the full length of the pipe.
2. Alternate installation methods may only be used when specified or approved by the Engineer.

REVISIONS		
Date	Description	By
12/1/87	Delete ref. to Specs.	Gdo
4/1/93	Delete Alt. Arch	Gdo

State of Alaska
Department of Transportation
& Public Facilities

CULVERT PIPE & ARCH
INSTALLATION DETAILS

D-01.02

STANDARD PLAN D-01.02

Preliminary Plans

PLANS DEVELOPED BY: STATE OF ALASKA DEPARTMENT OF TRANSPORTATION & PUBLIC FACILITIES, NORTHERN REGION, 2301 PEGER ROAD, FAIRBANKS, AK 99709 (907)451-2200
R:\Projects\Drafting Special Projects\Working folder\HWY\Little Goldstream\00476_V1-d01.02 Wed, Jul/01/20 01:11pm

STATE	PROJECT DESIGNATION	YEAR	SHEET NO.	TOTAL SHEETS
ALASKA	PENDING/NFHWY00476	2020	V4	V32

D-04.21

Minimum & Maximum Cover For 2 2/3" x 1/2" Aluminum Pipe

GAGE	0.060"		0.075"		0.105"		0.135"		0.164"	
Dia. (In)	Min. (In)	Max. (Ft)	Min. (In)	Max. (Ft)	Min. (In)	Max. (Ft)	Min. (In)	Max. (Ft)	Min. (In)	Max. (Ft)
12	12	100+	12	100+	12	100+	12	100+	12	100+
15	12	94	12	100+	12	100+	12	100+	12	100+
18	12	75	12	94	12	100+	12	100+	12	100+
21	12	65	12	82	12	100+	12	100+	12	100+
24	12	56	12	71	12	99	12	100+	12	100+
27	12	48	12	63	12	89	12	100+	12	100+
30			12	56	12	79	12	100+	12	100+
36			12	47	12	66	12	85	12	100+
42			12	55	12	56	12	73	12	100+
48			12	47	12	49	12	63	12	78
54					15	43	15	56	15	69
60							15	50	15	62
66							18	44	18	56
72									18	45

Minimum & Maximum Cover For 3" x 1" Aluminum Pipe

GAGE	0.060"		0.075"		0.105"		0.135"		0.164"	
Dia. (In)	Min. (In)	Max. (Ft)	Min. (In)	Max. (Ft)	Min. (In)	Max. (Ft)	Min. (In)	Max. (Ft)	Min. (In)	Max. (Ft)
30	12	52	12	65						
36	12	43	12	54	12	100+	12	100+	12	100+
42	12	36	12	46	12	65	12	100+	12	100+
48	12	32	12	40	12	57	12	73	12	100+
54	15	28	15	35	15	50	12	65	12	100+
60	15	25	15	32	15	45	15	58	15	72
66	18	23	18	28	18	41	18	53	18	65
72	18	21	18	26	18	37	18	48	18	59
78			21	24	21	34	21	44	21	55
84					21	31	21	41	21	57
90					24	29	24	38	21	47
96					24	27	24	36	24	44
102							24	33	24	41
108							24	31	24	39
114									24	37
120									24	35

Minimum & Maximum Cover For 9" x 2 1/2" Aluminum Structural Plate Pipe*

GAGE	0.100"		0.125"		0.150"		0.175"		0.200"		0.225"		0.250"	
Dia. (In)	Min. (In)	Max. (Ft)	Min. (In)	Max. (Ft)	Min. (In)	Max. (Ft)	Min. (In)	Max. (Ft)	Min. (In)	Max. (Ft)	Min. (In)	Max. (Ft)	Min. (In)	Max. (Ft)
60	12	29 31	12	38 45	12	49 60	12	58 70	12	58 81	12	58 92	12	58 100+
66	12	26 28	12	35 41	12	44 54	12	53 64	12	53 74	12	53 84	12	53 94
72	13	24 25	12	32 37	12	41 50	12	48 58	12	48 67	12	48 77	12	48 86
78	14	22 23	12	29 35	12	37 46	12	45 54	12	45 62	12	45 71	12	45 79
84	15	20 22	13	27 32	12	35 42	12	41 50	12	41 58	12	41 66	12	41 73
90	16	19 20	14	25 30	13	32 40	12	39 47	12	39 54	12	39 61	12	39 68
96	17	18 19	15	24 28	14	30 37	13	36 44	12	36 50	12	36 57	12	36 64
102	18	17 18	16	22 26	15	29 35	14	34 41	13	34 47	13	34 54	13	34 60
108	19	16 17	17	21 25	16	27 33	14	32 39	14	32 45	14	32 51	14	32 57
114	20	15 16	18	20 23	16	25 31	15	30 37	15	30 42	15	30 48	15	30 54
120	21	14 15	19	19 22	17	24 30	16	29 35	15	29 40	15	29 46	15	29 51
126	22	13 14	20	18 21	18	23 28	17	27 33	16	27 38	16	27 44	16	27 49
132	23	13 14	21	17 20	19	22 27	18	26 32	17	26 37	17	26 42	17	26 47
138	24	12 13	22	16 19	20	21 26	18	25 30	18	25 35	18	25 40	18	25 44
144	25	12 12	22	16 18	21	20 25	19	24 29	18	24 33	18	24 38	18	24 43
150			23	15 18	21	19 24	20	23 28	19	23 32	19	23 36	19	23 41
156			24	14 17	22	18 23	21	22 27	20	22 31	20	22 35	20	22 39
162					23	18 22	21	21 26	21	21 30	21	21 34	21	21 38
168					24	17 21	22	20 25	21	20 29	21	20 33	21	20 36
174					25	17 20	23	20 24	22	20 28	22	20 31	22	20 35
180							24	19 23	23	19 27	23	19 30	23	19 34

*Longitudinal seams use (5 1/3) 3/4" dia. bolts per foot.

58 — Upper figure for pipe with aluminum bolts. (FOR TABLE ABOVE ONLY.)
100+ — Lower figure for pipe with galvanized steel bolts.

CORRUGATED CIRCULAR ALUMINUM PIPE

CORRUGATED ALUMINUM PIPE-ARCH

Minimum & Maximum Cover For 2 2/3" x 1/2" Aluminum Pipe-Arch

Span x Rise (In. x In.)	Corner Radius (In)	Minimum Gage (In)	Min. Cover (In)	Max. Cover (Ft) 2 Tons Corner Bearing Pressure	Max. Cover (Ft) 3 Tons Corner Bearing Pressure ⊘
17 x 13	3	0.060	12	13	20
21 x 15	3	0.060	12	12	19
24 x 18	3	0.060	12	11	16
28 x 20	3	0.075	12	10	16
35 x 24	3	0.075	12	9	14
42 x 29	3 1/2	0.105	12	7	13
49 x 33	4	0.105	15	6	12
57 x 38	5	0.135	15	6	12
64 x 43	6	0.135	18	6	12
71 x 47	7	0.164	18	6	12

Minimum & Maximum Cover For 3" x 1" Aluminum Pipe-Arch

Span x Rise (In. x In.)	Corner Radius (In)	Minimum Gage (In)	Min. Cover (In)	Max. Cover (Ft) 2 Tons Corner Bearing Pressure	Max. Cover (Ft) 3 Tons Corner Bearing Pressure ⊘
40 x 31	5	0.075	30	8	12
46 x 36	6	0.075	24	8	13
53 x 41	7	0.075	24	8	13
60 x 46	8	0.075	24	13	20
66 x 51	9	0.075	18	13	20
73 x 55	12	0.075	18	16	24
81 x 59	14	0.105	18	14	22
87 x 63	14	0.105	18	13	20
95 x 67	16	0.105	18	12	18
103 x 71	16	0.135	24	11	17
112 x 75	18	0.164	24	10	16
117 x 79	18	0.164	24	10	15

Minimum & Maximum Cover For 9" x 2 Ð" Aluminum Structural Plate Pipe-Arch *

Span x Rise (Ft-In x Ft-In)	Corner Radius (In)	Minimum Gage (In)	Min. Cover (Ft)	Max. Cover In Feet For Soil Bearing Capacity of: 2 Tons/ft²	3 Tons/ft²
5 – 11 x 5 – 5	31.8	0.100	2	24**	24**
6 – 11 x 5 – 9	31.8	0.100	2	22**	22**
7 – 3 x 5 – 11	31.8	0.100	2	20**	20**
7 – 9 x 6 – 0	31.8	0.100	2	20**	18**
8 – 5 x 6 – 3	31.8	0.100	2	17**	17**
9 – 3 x 6 – 5	31.8	0.100	2	15**	15**
10 – 3 x 6 – 9	31.8	0.100	2	14**	14**
10 – 9 x 6 – 10	31.8	0.100	2	13**	13**
11 – 5 x 7 – 1	31.8	0.100	2	12**	12**
12 – 7 x 7 – 5	31.8	0.125	2	14	16**
12 – 11 x 7 – 6	31.8	0.150	2	13	14**
13 – 1 x 8 – 2	31.8	0.150	2	13	18**
13 – 11 x 8 – 5	31.8	0.150	2	12	17**
14 – 8 x 9 – 8	31.8	0.175	2	12	18
15 – 4 x 10 – 0	31.8	0.175	2	11	17
16 – 1 x 10 – 4	31.8	0.200	2	10	16
16 – 9 x 10 – 8	31.8	0.200	2.17	10	15
17 – 3 x 11 – 0	31.8	0.225	2.25	10	15
18 – 0 x 11 – 4	31.8	0.255	2.25	9	14
18 – 8 x 11 – 8	31.8	0.250	2.33	9	14

*Longitudinal seams use (5 1/3) 3/4" dia. bolts per foot.

**Fill limited by the seam strength of the bolts. 3/4" dia. bolts per foot.

GENERAL NOTES:

1. All material and workmanship shall be in accordance with the State of Alaska, Standard Specifications for Highway Construction.
2. The contractor shall select only pipes that meet specific height of cover criteria shown on the plans or in the special provisions.
3. No more than one type of pipe may be used on any single installation or installation grouping.
4. All structural plate pipes shall be placed on a pre-shaped foundation conforming to the depth of the bottom plates with clearance for assembling to the adjacent plates allowed.
5. See Standard Plan "Culvert Pipe & Arch Installation Details" for foundation and structural backfill details.
6. Minimum cover shall be measured from the top of pipe to the top of rigid pavement or to the top of flexible pavement subgrade. In all cases, the minimum cover shall not be less than 12". Minimum cover during construction shall be that required to protect the pipe from damage or deflecton.
7. These tables have been developed for an H-20 live load and for compacted soil weighing 120 lbs. per cubic foot or less. If compacted soil cover exceeds 120 lbs. per cubic foot, the contractor shall use the depth of cover shown in the plans for the specific pipe. Where compacted soil cover exceeds 120 lbs. per cubic foot and no specific cover requirements are provided in the plans, the contractor shall determine the required minimum pipe cover in accordance with Section 12 of the 2000 AASHTO "LRFD Bridge Design Specifications".

METAL THICKNESSES & GAGES

ALUMINUM	GAGE NO. (For Info Only)
0.060	16
0.075	14
0.105	12
0.135	10
0.164	8

⊘ This column shall not be used unless specified on the plans or approved by the Regional Geotechnical Engineer.

REVISIONS		
Date	Description	By
8/10/00	Pipe Tables & G. Notes.	DFD
10/31/03	Pipe Table Updates & New Sheet 4	LRG

Sheet 1 of 4

State of Alaska
Department of Transportation & Public Facilities

PIPE AND ARCH TABLES

D-04.21

STANDARD PLAN D-04.21
SHEET 1 OF 4

Preliminary Plans

PLANS DEVELOPED BY: STATE OF ALASKA DEPARTMENT OF TRANSPORTATION & PUBLIC FACILITIES, NORTHERN REGION, 2301 PEGER ROAD, FAIRBANKS, AK 99709 (907)451-2200
R:\Projects\Drafting Special Projects\Working folder\HWY\Little Goldstream\d0421_NR-d04.21a Wed, Jul/01/20 01:11pm

STATE	PROJECT DESIGNATION	YEAR	SHEET NO.	TOTAL SHEETS
ALASKA	PENDING/NFHWY00476	2020	V5	V32

D-04.21

Minimum & Maximum Cover For 2 2/3" x 1/2" Steel Pipe

GAGE	0.064"		0.079"		0.109"		0.138"		0.168"	
Dia. (In)	Min. (In)	Max. (Ft)	Min. (In)	Max. (Ft)	Min. (In)	Max. (Ft)	Min. (In)	Max. (Ft)	Min. (In)	Max. (Ft)
12	12	100+	12	100+	12	100+	12	100+	12	100+
15	12	100+	12	100+	12	100+	12	100+	12	100+
18	12	100+	12	100+	12	100+	12	100+	12	100+
21	12	100+	12	100+	12	100+	12	100+	12	100+
24	12	100+	12	100+	12	100+	12	100+	12	100+
27	12	100+	12	100+	12	100+	12	100+	12	100+
30	12	99	12	100+	12	100+	12	100+	12	100+
36	12	83	12	100+	12	100+	12	100+	12	100+
42	12	71	12	88	12	100+	12	100+	12	100+
48	12	62	12	77	12	100+	12	100+	12	100+
54			12	66	12	93	12	100+	12	100+
60					12	79	12	100+	12	100+
66					12	68	12	88	12	100+
72							12	75	12	93
78									12	79
84									12	66

Minimum & Maximum Cover For 3" x 1" Steel Pipe

GAGE	0.064"		0.079"		0.109"		0.138"		0.168"	
Dia. (In)	Min. (In)	Max. (Ft)	Min. (In)	Max. (Ft)	Min. (In)	Max. (Ft)	Min. (In)	Max. (Ft)	Min. (In)	Max. (Ft)
36	12		12		12	100+	12	100+	12	100+
42	12		12		12	100+	12	100+	12	100+
48	12		12	76	12	100+	12	100+	12	100+
54	12	63	12	79	12	100+	12	100+	12	100+
60	12	56	12	71	12	99	12	100+	12	100+
66	12	52	12	64	12	90	12	100+	12	100+
72	12	47	12	59	12	82	12	100+	12	100+
78	12	44	12	54	12	77	12	98	12	100+
84	12	41	12	51	12	71	12	92	12	100+
90	12	37	12	47	12	67	12	86	12	100+
96	12	35	12	44	12	62	12	80	12	98
102	18	33	18	42	18	59	18	76	18	93
108			18	40	18	55	18	71	18	87
114			18	36	18	51	18	66	18	80
120			18	34	18	46	18	61	18	75
126					18	44	18	56	18	70
132					18	41	18	53	18	64
138					18	37	18	49	18	60
144							18	44	18	55
150									18	52

Minimum & Maximum Cover For 5" x 1" Steel Pipe*

GAGE	0.064"		0.079"		0.109"		0.138"		0.168"	
Dia. (In)	Min. (In)	Max. (Ft)	Min. (In)	Max. (Ft)	Min. (In)	Max. (Ft)	Min. (In)	Max. (Ft)	Min. (In)	Max. (Ft)
36	12	81	12	90	12	100+	12	100+	12	100+
42	12	71	12	77	12	100+	12	100+	12	100+
48	12	62	12	68	12	100+	12	100+	12	100+
54	12	56	12	70	12	98	12	100+	12	100+
60	12	50	12	63	12	88	12	100+	12	100+
66	12	46	12	57	12	80	12	100+	12	100+
72	12	42	12	52	12	73	12	95	12	100+
78	12	39	12	48	12	68	12	87	12	100+
84	12	36	12	45	12	63	12	81	12	99
90	12	33	12	42	12	59	12	76	12	93
96	12	31	12	39	12	55	12	71	12	87
102	18	29	18	37	18	52	18	67	18	82
108			18	35	18	49	18	63	18	77
114			18	32	18	45	18	58	18	71
120			18	30	18	41	18	54	18	66
126					18	39	18	50	18	62
132					18	36	18	47	18	57
138					18	33	18	43	18	53
144							18	39	18	49
150									19	47

*Table for pipe with helical locksearns or helical welded seams ONLY.

Minimum & Maximum Cover For 6" x 2" Steel Structural Plate Pipe**

GAGE	ALL	0.111"	0.140"	0.170"	0.188"	0.218"	0.249"	0.280"
Dia. (In)	Min. (In)	Max. (Ft)	Max. (Ft)	Max. (Ft)	Max. (Ft)	Max. (Ft)	Max. (Ft)	Max. (Ft)
60	12	46	68	90	100+	100+	100+	100+
66	12	42	62	81	93	100+	100+	100+
72	12	38	57	75	86	100+	100+	100+
78	12	35	52	69	79	95	100+	100+
84	12	33	49	64	73	88	100+	100+
90	12	31	45	60	68	82	97	100+
96	12	29	43	56	64	77	91	100+
102	18	27	40	52	60	73	86	94
108	18	25	38	50	57	69	81	88
114	18	24	36	47	54	65	77	84
120	18	23	34	45	51	62	73	80
126	18	22	32	42	49	59	69	76
132	18	21	31	40	46	56	66	72
138	18	20	29	39	44	54	63	69
144	18	19	28	37	43	51	61	66
150	24	18	27	36	41	49	58	64
156	24	17	26	34	39	47	56	61
162	24	17	25	33	38	46	54	59
168	24	16	24	32	36	44	52	57
174	24	16	23	31	35	42	50	55
180	24	15	22	30	34	41	48	53
186	24	15	22	29	33	40	47	51
192	24		21	28	32	38	45	50
198	30		20	27	31	37	44	48
204	30		20	26	30	36	43	47
210	30		19	25	29	35	41	45
216	30			25	28	34	40	44
222	30			24	27	33	39	43
228	30			23	27	32	38	42
234	30			23	26	31	37	41
240	30				25	31	36	40
246	36				25	30	35	39
252	36					29	34	38
258	36					28	34	37
264	36					28	33	36
270	36					27	32	35
276	36						31	34
282	36						31	34
288	42						30	33
294	42							32
300	42							32
306	42							31
312	42							30

**Longitudinal seams use (4) 3/4" dia. bolts per foot.

CORRUGATED CIRCULAR STEEL PIPE

CORRUGATED STEEL PIPE-ARCH

Minimum & Maximum Cover For 2 2/3" x 1/2" Steel Pipe-Arch

Span x Rise (In. x In.)	Corner Radius (In)	Minimum Gage (In)	Min. Cover (In)	Max. Cover (Ft) 2 Tons Corner Bearing Pressure	Max. Cover (Ft) 3 Tons Corner Bearing Pressure ⊘
17 x 13	3	0.064	12	16	18
21 x 15	3	0.064	12	15	14
24 x 18	3	0.064	12	15	13
28 x 20	3	0.064	12	15	11
35 x 24	3	0.064	12	15	7
42 x 29	3 1/2	0.064	12	15	7
49 x 33	4	0.079	12	15	6
57 x 38	5	0.109	12	15	8
64 x 43	6	0.109	12	15	9
71 x 47	7	0.138	12	15	10
77 x 52	8	0.168	12	15	10
83 x 57	9	0.168	12	15	10

Minimum & Maximum Cover For 3" x 1" Steel Pipe-Arch

Span x Rise (In. x In.)	Corner Radius (In)	Minimum Gage (In)	Min. Cover (In)	Max. Cover (Ft) 2 Tons Corner Bearing Pressure	Max. Cover (Ft) 3 Tons Corner Bearing Pressure ⊘
40 x 31	5	0.079	12	25	12
46 x 36	6	0.079	12	25	13
53 x 41	7	0.079	12	25	13
60 x 46	8	0.079	15	25	13
66 x 51	9	0.079	15	25	13
73 x 55	12	0.079	18	24	16
81 x 59	14	0.079	18	21	17
87 x 63	14	0.079	18	20	16
95 x 67	16	0.079	18	20	17
103 x 71	16	0.079	18	20	15
112 x 75	18	0.079	21	20	16
117 x 79	18	0.109	21	19	15
128 x 83	18	0.138	24	19	14
137 x 87	18	0.138	24	19	13
142 x 91	18	0.138	24	19	12
150 x 96	18	0.138	30	19	
157 x 96	18	0.138	30	19	
164 x 105	18	0.138	30	19	
171 x 110	18	0.138	30	19	

Minimum & Maximum Cover For 5" x 1" Steel Pipe-Arch

Span x Rise (In. x In.)	Corner Radius (In)	Minimum Gage (In)	Min. Cover (In)	Max. Cover (Ft) 2 Tons Corner Bearing Pressure	Max. Cover (Ft) 3 Tons Corner Bearing Pressure ⊘
40 x 31	5	0.109	12	25	12
46 x 36	6	0.109	15	25	13
53 x 41	7	0.109	15	25	13
60 x 46	8	0.109	18	25	13
66 x 51	9	0.109	18	25	13
73 x 55	12	0.109	18	24	16
81 x 59	14	0.109	18	21	17
87 x 63	14	0.109	18	20	16
95 x 67	16	0.109	18	20	17
103 x 71	16	0.109	18	20	15
112 x 75	18	0.109	21	20	16
117 x 79	18	0.109	21	19	15
128 x 83	18	0.109	24	19	14
137 x 87	18	0.109	24	19	13
142 x 91	18	0.109	24	19	12
150 x 96	18	0.138	30	19	
157 x 96	18	0.138	30	19	
164 x 105	18	0.138	30	19	
171 x 110	18	0.138	30	19	

Minimum & Maximum Cover For 6" x 2" Steel Structural Plate Pipe-Arch **

Span x Rise (Ft-In x Ft-In)	Corner Radius (In)	Minimum Gage (In)	2 Tons Corner Bearing Pressure Min. Cover (In)	2 Tons Corner Bearing Pressure Max. Cover (Ft)	3 Tons Corner Bearing Pressure ⊘ Min. Cover (In)	3 Tons Corner Bearing Pressure ⊘ Max. Cover (Ft)
6-1 x 4-7	18	0.111	18	16	12	24
7-0 x 5-1	18	0.111	18	14	12	21
7-11 x 5-7	18	0.111	18	13	12	19
8-10 x 6-1	18	0.111	24	11	18	17
9-9 x 6-7	18	0.111	24	10	18	15
10-11 x 7-1	18	0.111	24	9	18	14
11-10 x 7-7	18	0.111	24	7	18	13
12-10 x 8-4	18	0.111	30	6	24	12
14-1 x 8-9	18	0.111	30	5	24	11
15-4 x 9-3	18	0.111	NS	NS	24	10
15-10 x 9-10	18	0.111	NS	NS	24	9
16-7 x 10-1	18	0.111	NS	NS	24	9
13-3 x 9-4	31	0.111	24	13	24	17
14-2 x 9-10	31	0.111	24	12	24	16
15-4 x 10-4	31	0.111	24	11	24	15
16-3 x 10-10	31	0.111	24	11	24	14
17-2 x 11-4	31	0.111	30	10	30	13
18-1 x 11-10	31	0.111	30	10	30	12
19-3 x 12-4	31	0.111	30	9	30	13
19-11 x 12-10	31	0.140	30	9	30	13
20-7 x 13-2	31	0.140	36	7	36	13

NS = Not Suitable

⊘ This column shall not be used unless specified on the plans or approved by the Region Geotechnical Engineer.

**Longitudinal seams use (4) 3/4" dia. bolts per foot.

GENERAL NOTES

1. All material and workmanship shall be in accordance with the State of Alaska, Standard Specifications for Highway Construction.
2. The contractor shall select only pipes that meet specific height of cover criteria shown on the plans or in the special provisions.
3. No more than one type of pipe may be used on any single installation or installation grouping.
4. All structural plate pipes shall be placed on a pre-shaped foundation conforming to the depth of the bottom plates with clearance for assembling to the adjacent plates allowed.
5. See Standard Plan "Culvert Pipe & Arch Installation Details" for foundation and structural backfill details.
6. Minimum cover shall be measured from the top of pipe to the top of rigid pavement or to the top of flexible pavement subgrade. In all cases, the minimum cover shall not be less than 12". Minimum cover during construction shall be that required to protect the pipe from damage or deflecton.
7. These tables have been developed for an H-20 live load and for compacted soil weighing 120 lbs. per cubic foot or less. If compacted soil cover exceeds 120 lbs. per cubic foot, the contractor shall use the depth of cover shown in the plans for the specific pipe. Where compacted soil cover exceeds 120 lbs. per cubic foot and no specific cover requirements are provided in the plans, the contractor shall determine the required minimum pipe cover in accordance with Section 12 of the 2000 AASHTO "LRFD Bridge Design Specifications".

METAL THICKNESSES & GAGES

STEEL ZINC COATED	STEEL UNCOATED	GAGE NO. (For Info Only)
0.064	0.0598	16
0.079	0.0747	14
0.109	0.1047	12
0.138	0.1345	10
0.168	0.1644	8
0.188	0.1838	7
0.218	0.2145	5
0.249	0.2451	3
0.280	0.2758	1

REVISIONS

Date	Description	By
8/10/00	Pipe Tables & G. Notes.	DFD
10/31/03	Pipe Table Updates & New Sheet 4.	LRG

Sheet 2 of 4

State of Alaska
Department of Transportation
& Public Facilities

PIPE AND ARCH TABLES

D-04.21

STANDARD PLAN D-04.21
SHEET 2 OF 4

Preliminary Plans

PLANS DEVELOPED BY: STATE OF ALASKA DEPARTMENT OF TRANSPORTATION & PUBLIC FACILITIES, NORTHERN REGION, 2301 PEGER ROAD, FAIRBANKS, AK 99709 (907)451-2200
R:\Projects\Drafting Special Projects\Working folder\HWY\Little Goldstream\d0421_NR-d04.21b Wed, Jul/01/20 01:11pm

STATE	PROJECT DESIGNATION	YEAR	SHEET NO.	TOTAL SHEETS
ALASKA	PENDING/NFHWY00476	2020	V6	V32

D-04.21

Maximum Cover for Type S Corrugated Polyethelene Pipe	
Size (in.)	Max. Cover (ft.)
12	30.0
15	30.0
18	30.0
24	30.0
30	30.0
36	30.0
40	20.0
48	20.0

GENERAL NOTES

1. All materials and workmanship shall be in accordance with the State of Alaska Standard Specifications for Highway Construction.
2. For foundation and structural backfill details see Standard Plan "Culvert Pipe & Arch Installation Details".
3. Pipe cover height is measured from top of the pipe to top of rigid pavement, or to the top of subgrade for flexible pavement. In all cases the minimum cover shall be no less than 2 ft. Where loads traverse the culvert during construction minimum cover shall be no less than 4 ft.

REVISIONS		
Date	Description	By
10/31/03	New Sheet 4.	LRG

Sheet 3 of 4

State of Alaska
Department of Transportation
& Public Facilities

PIPE AND ARCH TABLES

D-04.20

STANDARD PLAN D-04.21
SHEET 3 OF 4

Preliminary Plans

PLANS DEVELOPED BY: STATE OF ALASKA DEPARTMENT OF TRANSPORTATION & PUBLIC FACILITIES, NORTHERN REGION, 2301 PEGER ROAD, FAIRBANKS, AK 99709 (907)451-2200
R:\Projects\Drafting Special Projects\Working folder\HWY\Little Goldstream\d0421_NR-d04.21c Wed, Jul/01/20 01:12pm

STATE	PROJECT DESIGNATION	YEAR	SHEET NO.	TOTAL SHEETS
ALASKA	PENDING/NFHWY00476	2020	V7	V32

D-04.21

GENERAL NOTES

1. All material and workmanship shall be in accordance with the State of Alaska, Standard Specifications for Highway Construction.
2. The contractor shall select only pipes that meet specific height of cover criteria shown on the plans or in the special provisions.
3. No more than one type of pipe may be used on any single installation or installation grouping.
4. All structural plate pipes shall be placed on a pre-shaped foundation conforming to the depth of the bottom plates with clearance for assembling to the adjacent plates allowed.
5. See Standard Plan "Culvert Pipe & Arch Installation Details" for foundation and structural backfill details.
6. Minimum cover shall be measured from the top of pipe to the top of rigid pavement or to the top of flexible pavement subgrade. In all cases, the minimum cover shall not be less than 12". Minimum cover during construction shall be that required to protect the pipe from damage or deflecton.
7. These tables have been developed for an H-20 live load and for compacted soil weighing 120 lbs. per cubic foot or less. If compacted soil cover exceeds 120 lbs. per cubic foot, the contractor shall use the depth of cover shown in the plans for the specific pipe. Where compacted soil cover exceeds 120 lbs. per cubic foot and no specific cover requirements are provided in the plans, the contractor shall determine the required minimum pipe cover in accordance with Section 12 of the 2000 AASHTO "LRFD Bridge Design Specifications".

ALUMINUM SPIRAL RIB PIPE

Minimum & Maximum Cover For Aluminum Spiral Rib Circular Pipe*

GAGE	0.060*		0.075*		0.105*		0.135*	
Dia. (In)	Min. (In)	Max. (Ft)	Min. (In)	Max. (Ft)	Min. (In)	Max. (Ft)	Min. (In)	Max. (Ft)
12	24	35	24	50				
18	24	34	24	49				
24	24	25	24	36	24	63	24	82
30	24	19	24	28	24	50	24	65
36	24	15	24	24	24	41	24	54
42			24	19	24	35	24	46
48			24	17	24	30	24	40
54			24	14	24	27	24	35
60			24	12	24	24	24	30

*¾ x ¾ x 7½ In. or ¾ x 1 x 11½ In. Corrugations

Minimum & Maximum Cover For Aluminum Spiral Rib Pipe-Arch*

Span x Rise (In. x In.)	Min. Cover (In.)	Soil Corner Bearing Capacity of 2 Tons/ s.f. 0.060* Max. Cover (ft.)	0.075* Max. Cover (ft.)	0.105* Max. Cover (ft.)
20 x 16	12	13		
23 x 19	12	14		
27 x 21	12	13		
33 x 26	12	13		
40 x 31	12	13		
46 x 36	12	14		
53 x 41	18		13	
60 x 46	18		20	
66 x 51	18		21	
73 x 55	18			21
81 x 59	18			17
87 x 63	18			17
95 x 67	18			17

*¾ x ¾ x 7½ In. or ¾ x 1 x 11½ In. Corrugations

STEEL SPIRAL RIB PIPE

Minimum & Maximum Cover For Steel and Aluminized Steel Spiral Rib Circular Pipe*

GAGE	0.064*		0.079*		0.109*		0.138**	
Dia. (In)	Min. (In)	Max. (Ft)	Min. (In)	Max. (Ft)	Min. (In)	Max. (Ft)	Min. (In)	Max. (Ft)
18	12							
24	12	51	12	72	12	121		
30	12	41	12	58	12	97		
36	12	34	12	48	12	81		
42	12	29	12	41	12	69		
48	12	26	12	36	12	61		
54	18	23	18	32	18	54		
60	18	21	18	29	18	49	18	73
66	18	19	18	26	18	44	18	65
72			18	24	18	40	18	59
78			24	22	24	37	24	55
84			24	21	24	35	24	52
90					24	32	24	47
96					24	30	24	44
102					30	29	30	43
108					30	27	30	41

*¾ x ¾ x 7½ In. or ¾ x 1 x 11½ In. Corrugations
**¾ x ¾ x 7½ In. Corrugations Only.

Minimum & Maximum Cover For Steel Spiral Rib Arch-Pipe*

Span x Rise (In. x In.)	Min. Cover (In.)	Soil Corner Bearing Capacity of 2 Tons/ s.f. 0.064* Max. Cover (ft.)	0.079* Max. Cover (ft.)	0.109* Max. Cover (ft.)
20 x 16	12	13		
23 x 19	12	14		
27 x 21	12	13		
33 x 26	12	13		
40 x 31	12	13		
46 x 36	12	14		
53 x 41	18		13	
60 x 46	18		20	
66 x 51	18		21	
73 x 55	18			21
81 x 59	18			17
87 x 63	18			17
95 x 67	18			17

*¾ x ¾ x 7½ In. or ¾ x 1 x 11½ In. Corrugations

REVISIONS

Date	Description	By
8/10/00	Pipe Tables & G. Notes:	DFD
10/31/01	New Sheet 4.	LRG

Sheet 4 of 4

State of Alaska
Department of Transportation
& Public Facilities

PIPE AND ARCH TABLES

D-04.21

STANDARD PLAN D-04.21
SHEET 4 OF 4

Preliminary Plans

PLANS DEVELOPED BY: STATE OF ALASKA DEPARTMENT OF TRANSPORTATION & PUBLIC FACILITIES, NORTHERN REGION, 2301 PEGER ROAD, FAIRBANKS, AK 99709 (907)451-2200
R:\Projects\Drafting Special Projects\Working folder\HWY\Little Goldstream\d0421_NR-d04.21d Wed, Jul/01/20 01:12pm

STATE	PROJECT DESIGNATION	YEAR	SHEET NO.	TOTAL SHEETS
ALASKA	PENDING/NFHWY00476	2020	V8	V32

G-00.04 SHEET 1 of 5

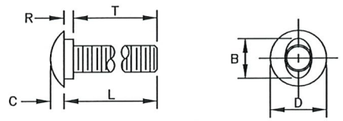

B	C	D	L (Length)	R	T (Thread Length)
15/16"	5/16"	1 5/16" or 1 7/16"	As Required	7/32"	As Required

5/8" BUTTONHEAD BOLT
(FBB01-05)

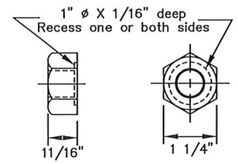

5/8" Dia. RECESSED HEX NUT
(FBB01-05)

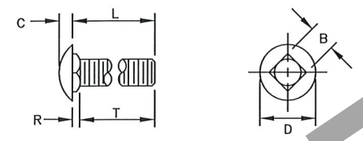

B	C	D	L (Length)	R	T (Thread Length)
5/8"	5/16"	1 5/16"	As Required	3/16"	As Required

5/8" Dia. CARRIAGE BOLT
(FBC10-20)

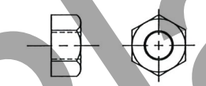

STANDARD HEX NUT

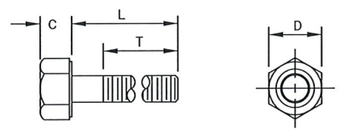

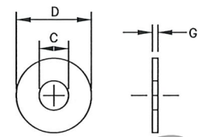

GENERAL NOTES:

1. All covered hardware shall comply with the AASHTO/AGC/ARTBA "A Guide to Standardized Highway Barrier Hardware", latest edition. Designators given when possible in parentheses.

Bolt Size	C	D	L (Length)	T (Thread Length)
5/16"	——	——	1 1/2"	7/8"
5/16"	——	——	1"	1"
3/8"	——	——	7 1/2"	1 1/2"
1/2"	——	——	1 1/2"	1 1/2"
1/2"	——	——	1 1/4"	1 1/4"
5/8" H.S.	5/16"	7/8"	8"	1 1/2"
5/8"-11	——	——	1 1/2"	1 1/2"
3/4"	——	——	1 1/2"	1 1/2"
3/4"	——	——	As Required	2"
3/4" H.S.	15/32"	1 1/4"	2"	1 1/2"

STANDARD HEX BOLTS

For Bolt ø	C	D	G
3/8"	7/16"	1"	5/64"
1/2"	17/32"	1 1/16"	3/32"
1/2" H.S.	17/32"	1 1/16"	3/32"
5/8"	11/16"	1 3/4"	9/64"
3/4"	13/16"	1 15/32"	9/64"
3/4" H.S.	13/16"	2"	5/32"
1"	1 1/16"	2"	9/64"

STANDARD STEEL WASHERS

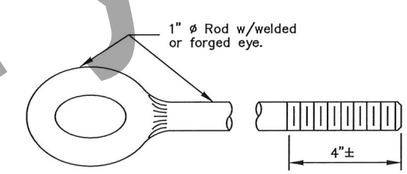

EYE BOLT

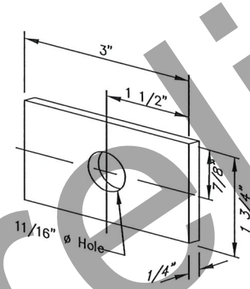

FLAT PLATE WASHER

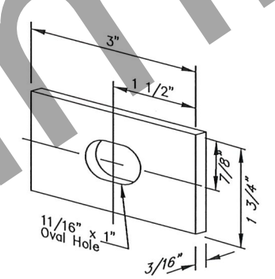

RECTANGULAR POST BOLT WASHER
(FWR03)

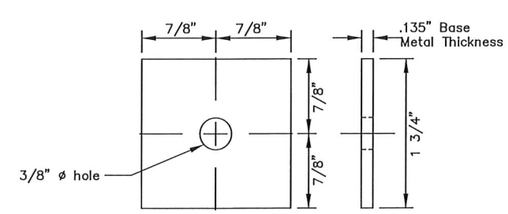

SQUARE STEEL WASHER
(FWR01)

Note: drawing not to scale

REVISIONS		
Date	Description	By
3/15/99	Delete BCT Hardware	KJS
1/16/17	Added Designators	LRG
12/22/17	No changes this sht.	LRG

State of Alaska DOT&PF

STANDARD GUARDRAIL HARDWARE
(NUTS, BOLTS & WASHERS)

G-00.04

STANDARD PLAN G-00.04
SHEET 1 OF 5

Preliminary Plans

PLANS DEVELOPED BY: STATE OF ALASKA DEPARTMENT OF TRANSPORTATION & PUBLIC FACILITIES, NORTHERN REGION, 2301 PEGER ROAD, FAIRBANKS, AK 99709 (907)451-2200
R:\Projects\Drafting Special Projects\Working folder\HWY\Little Goldstream\00476_V-G0004P1 Wed, Jul/01/20 01:12pm

STATE	PROJECT DESIGNATION	YEAR	SHEET NO.	TOTAL SHEETS
ALASKA	PENDING/NFHWY00476	2020	V9	V32

G-00.04 SHEET 2 of 5

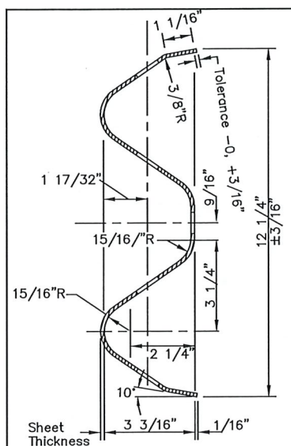

SECTION A-A
(RWM02a-b)

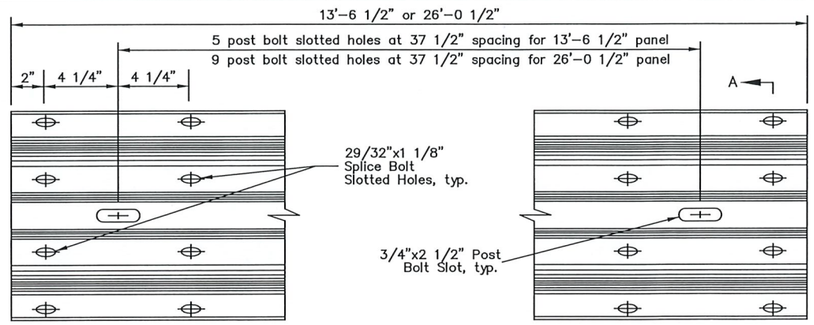

STANDARD W-BEAM PANEL (RWM04a-b)

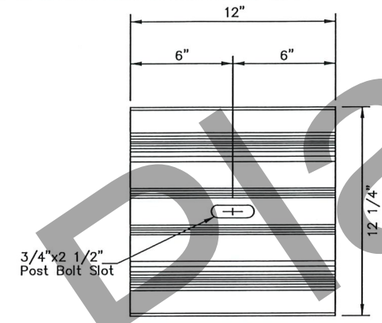

W-BEAM BACKUP PLATE
(RWB01a-b)

GENERAL NOTES:

1. All covered hardware shall comply with the AASHTO/AGC/ARTBA "A Guide to Standardized Highway Barrier Hardware", latest edition. Designators given when possible in parentheses.
2. Install back-up plates between blockouts and w-beam or thrie-beam rail at intermediate (non-splice) posts when steel blockouts are used but not with wood, rubber, plastic, or other approved blockouts.

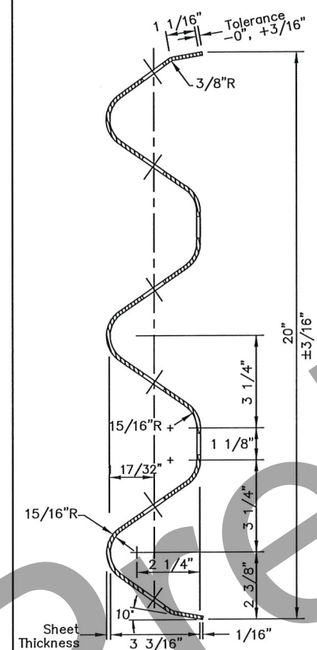

SECTION C-C
(RTM01a-02b)

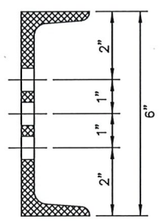

SECTION B-B

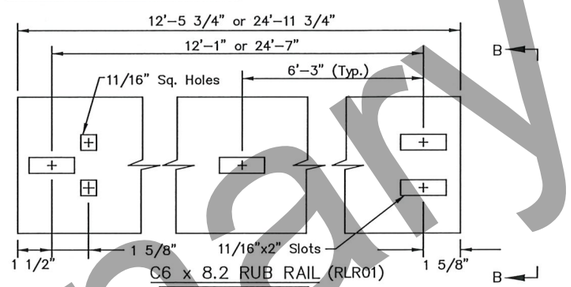

C6 x 8.2 RUB RAIL (RLR01)
ASTM A36 STEEL

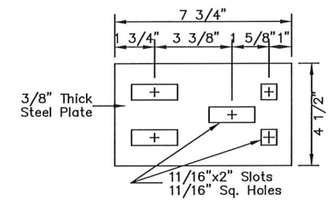

SPLICE PLATE (RLR01)
ASTM A36 STEEL

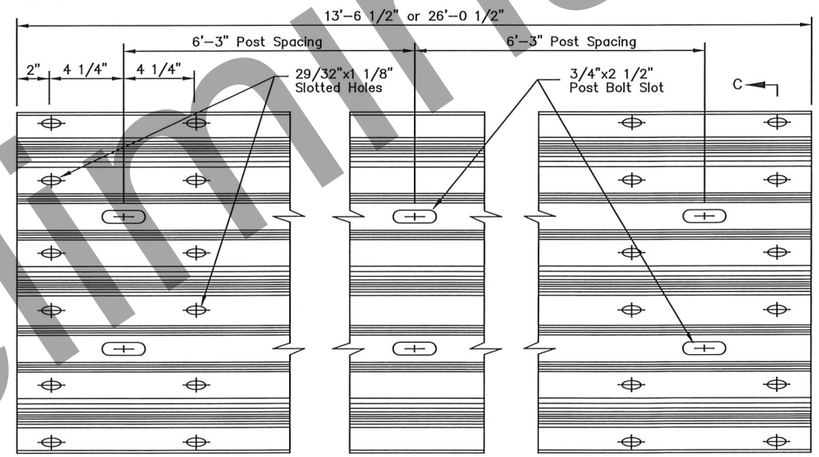

STANDARD THRIE BEAM PANEL (RTM01a-02b)

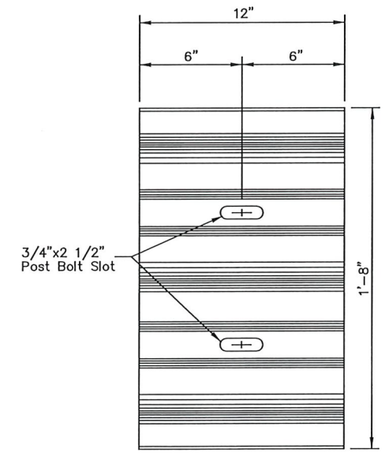

THRIE BEAM BACKUP PLATE
(RTB01a-02b)

REVISIONS		
Date	Description	By
4/28/10	Revise general notes	KJS
1/16/17	Fix dimensions in Sections A-A and C-C	LRG
12/22/17	Std w-beam to RWM04	LRG

State of Alaska DOT&PF

STANDARD GUARDRAIL HARDWARE (RAILS AND SPLICES)

G-00.04

STANDARD PLAN G-00.04
SHEET 2 OF 5

Preliminary Plans

PLANS DEVELOPED BY: STATE OF ALASKA DEPARTMENT OF TRANSPORTATION & PUBLIC FACILITIES, NORTHERN REGION, 2301 PEGER ROAD, FAIRBANKS, AK 99709 (907)451-2200
R:\Projects\Drafting Special Projects\Working folder\HWY\Little Goldstream\00476_V-G0004P2 Wed, Jul/01/20 01:12pm

STATE	PROJECT DESIGNATION	YEAR	SHEET NO.	TOTAL SHEETS
ALASKA	PENDING/NFHWY00476	2020	V10	V32

G-00.04 SHEET 3 of 5

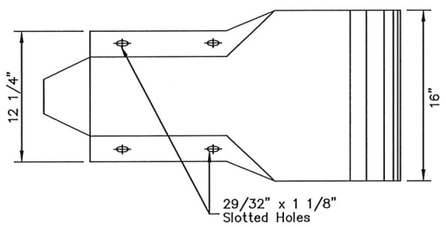

PROFILE

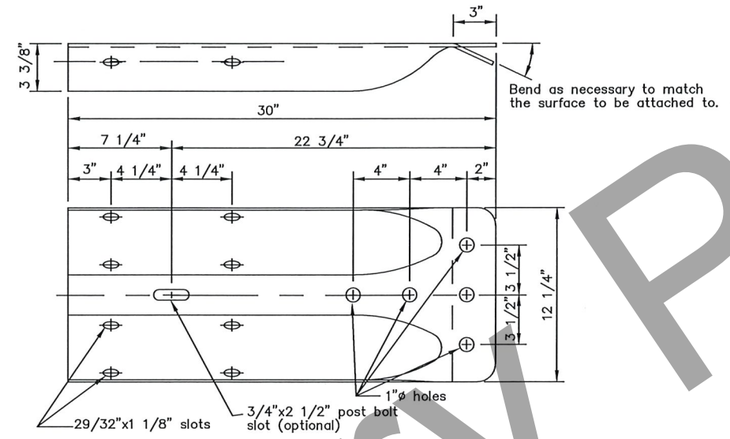

STANDARD W-BEAM TERMINAL CONNECTOR
(RWE02)

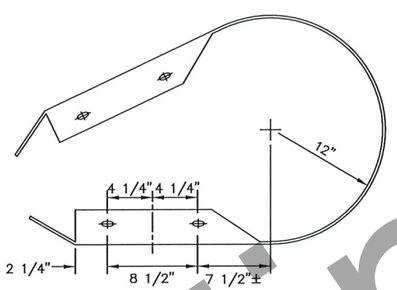

W-BEAM PLAN VIEW
*Radius to be specified on the plans

STANDARD W-BEAM END SECTION
(RWE06)

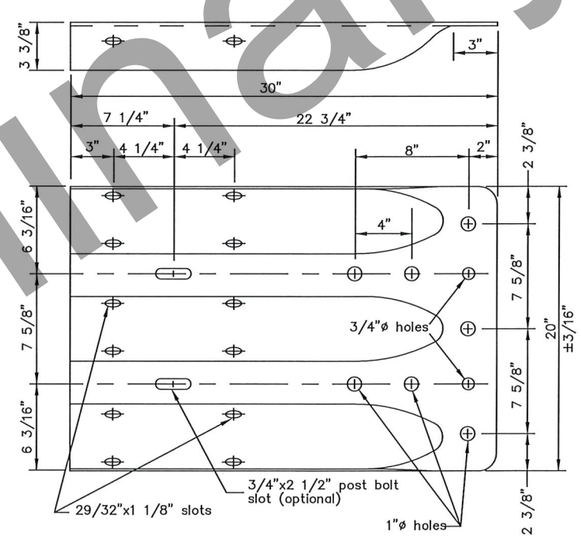

STANDARD THRIE BEAM TERMINAL CONNECTOR
(RTE01b)

Note: Drawing not to scale

GENERAL NOTES:

1. W-Beam and Thrie Beam Terminal Connectors shall conform to AASHTO M 180, Class B, Type II.
2. W-Beam end sections shall conform to AASHTO M 180, Class A, Type II.
3. All covered hardware shall comply with the AASHTO/AGC/ARTBA "A Guide to Standardized Highway Barrier Hardware", latest edition. Designators given when possible in parentheses.

REVISIONS

Date	Description	By
3/15/99	Delete Thrie end sect.	KJS
1/16/17	Holes added to Thrie	LRG
12/22/17	No changes this sht.	LRG

State of Alaska DOT&PF

STANDARD GUARDRAIL HARDWARE (TERMINAL CONNECTORS)

G-00.04

STANDARD PLAN G-00.04
SHEET 3 OF 5

Preliminary Plans

PLANS DEVELOPED BY: STATE OF ALASKA DEPARTMENT OF TRANSPORTATION & PUBLIC FACILITIES, NORTHERN REGION, 2301 PEGER ROAD, FAIRBANKS, AK 99709 (907)451-2200
R:\Projects\Drafting Special Projects\Working folder\HWY\Little Goldstream\00476_V-G0004P3 Wed, Jul/01/20 01:12pm

STATE	PROJECT DESIGNATION	YEAR	SHEET NO.	TOTAL SHEETS
ALASKA	PENDING/NFHWY00476	2020	V11	V32

G-00.04 SHEET 4 of 5

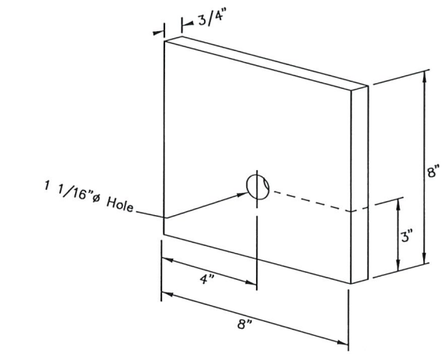

BEARING PLATE for CRT TERMINAL ANCHOR
(FPB01)

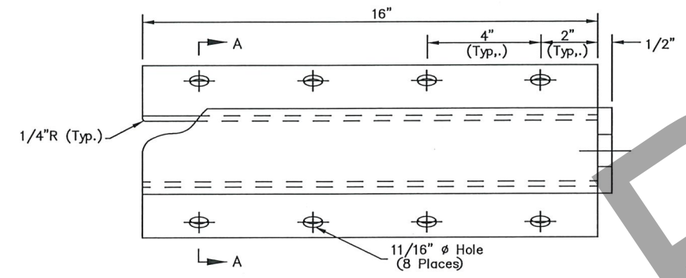

CABLE ANCHOR PLATE
(FPA01)

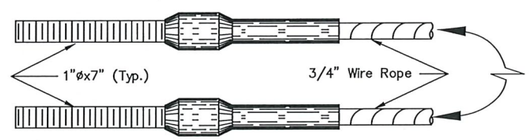

SWAGED FITTING DETAIL
(FCA01-02)

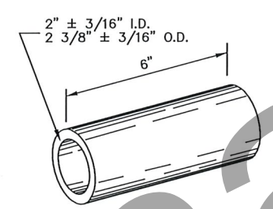

SLEEVE DETAIL
(FMM02)

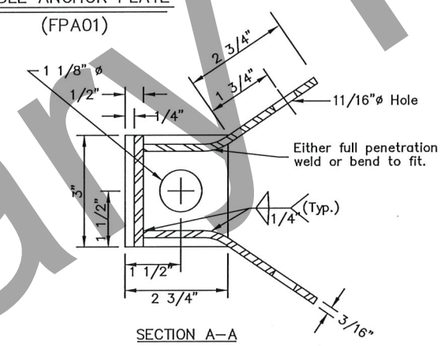

SECTION A-A

CONTROLLED RELEASE TERMINAL HARDWARE DETAILS

GENERAL NOTES:

1. Cable Anchor Plate may be formed in single unit or welded fabrication.
2. Anchor Cable Assembly must conform to AASHTO M 30 with Type II Wire Rope.
3. Provide Sleeve for Wood Posts meeting the requirements of ASTM A53 and made of 2-inch galvanized standard pipe. Sleeve shall be a tight, pressed fit in post.
4. Attach radius ID plates to all shop-bent guardrail sections. Bolt the ID plates to the back side of the guardrail panel with the lower splice bolt nearest the P.C. of the radius.
5. Show the Rail bend radius, in feet, as "XX" on the radius ID plate. Digits shall be etched or stamped and have a min. height of 1 1/2" and a max. width of 3/4". Galvanize the plate after the digits are marked.
6. All covered hardware shall comply with the AASHTO/AGC/ARTBA "A Guide to Standardized Highway Barrier Hardware", latest edition. Designators given when possible in parentheses.

Note: Drawing not to scale

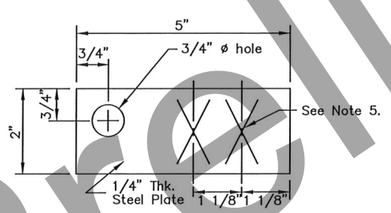

RADIUS I.D. PLATE

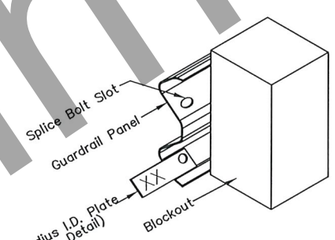

RADIUS I.D. PLATE MOUNTING DETAIL

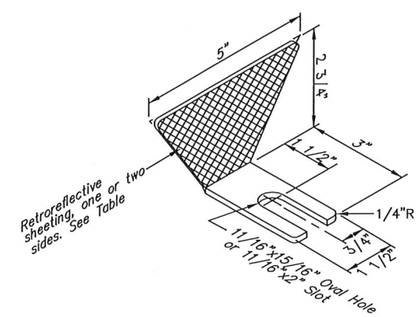

GUARDRAIL REFLECTOR

Guardrail Reflector Table

Type	Color	Reflectorized
A	White	Front & Rear
B	White	Front
C	Yellow	Front
D	Yellow	Front & Rear

REVISIONS		
Date	Description	By
3/15/99	Delete BCT Hardware	KJS
1/16/17	Change ASTM in Note 3	LRG
12/22/17	No changes this sht.	LRG

State of Alaska DOT&PF

STANDARD GUARDRAIL HARDWARE (MISCELLANEOUS)

G-00.04

STANDARD PLAN G-00.04
SHEET 4 OF 5

Preliminary Plans

PLANS DEVELOPED BY: STATE OF ALASKA DEPARTMENT OF TRANSPORTATION & PUBLIC FACILITIES, NORTHERN REGION, 2301 PEGER ROAD, FAIRBANKS, AK 99709 (907)451-2200
R:\Projects\Drafting Special Projects\Working folder\HWY\Little Goldstream\00476_V-G0004P4 Wed, Jul/01/20 01:12pm

STATE	PROJECT DESIGNATION	YEAR	SHEET NO.	TOTAL SHEETS
ALASKA	PENDING/NFHWY00476	2020	V12	V32

G-00.04 SHEET 5 of 5

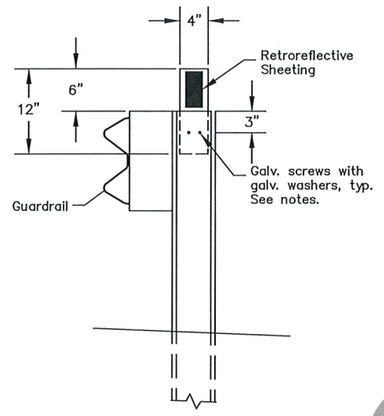

GUARDRAIL FLEXIBLE DELINEATOR DETAIL

(Steel post shown – similar for wood post)

CONSTRUCTION NOTES

1. Install guardrail flexible delineators where shown on the plans.
2. Install guardrail flexible delineators at 50 foot spacing, unless otherwise noted on the plans. Install not less than 2 delineators per guardrail run.
3. Use 3" x 5" white/yellow/red retroreflective sheeting as required per Standard Plan T-05. Install retroreflective sheeting on both sides of delineator on two-way roads.
4. Attach 4" x 12" flexible delineators to the top of new guardrail posts, on the trailing side of the posts relative to the adjacent lane's direction of travel.
5. Predrill or preform 5/16" diameter mounting holes in steel posts by the manufacturer prior to galvanizing. Predrilling or preforming holes not required for wood posts.
6. Use 2 each 1/4" dia. x 1-1/2" long galvanized lag screws for attaching to wood posts and 2 each 1/4" dia. x 3/4" long galvanized self-drilling fasteners for steel posts. Install a galvanized washer between the fastener head and the flexible delineator.

Note: Drawing not to scale

REVISIONS		
Date	Description	By
12/22/17	New Sht. 5 added	LRG

State of Alaska DOT&PF

STANDARD GUARDRAIL HARDWARE (FLEXIBLE DELINEATORS)

G-00.04

STANDARD PLAN G-00.04
SHEET 5 OF 5

Preliminary Plans

PLANS DEVELOPED BY: STATE OF ALASKA DEPARTMENT OF TRANSPORTATION & PUBLIC FACILITIES, NORTHERN REGION, 2301 PEGER ROAD, FAIRBANKS, AK 99709 (907)451-2200
R:\Projects\Drafting Special Projects\Working folder\HWY\Little Goldstream\00476_V-G0004P5 Wed, Jul/01/20 01:12pm

STATE	PROJECT DESIGNATION	YEAR	SHEET NO.	TOTAL SHEETS
ALASKA	PENDING/NFHWY00476	2020	V13	V32

G-05.11S SHEET 1 of 1

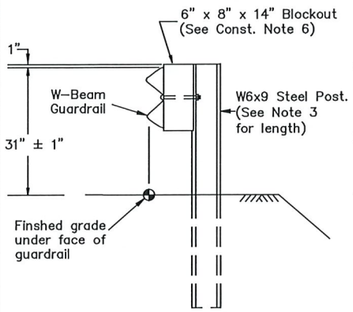

TYPE I POST INSTALLATION

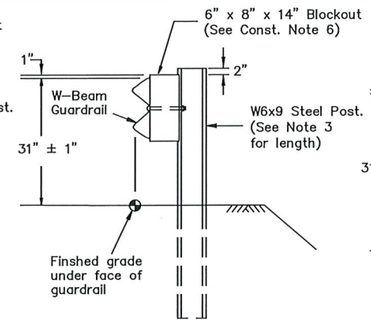

TYPE II POST INSTALLATION

(Facilitates raising rail for future overlays.)

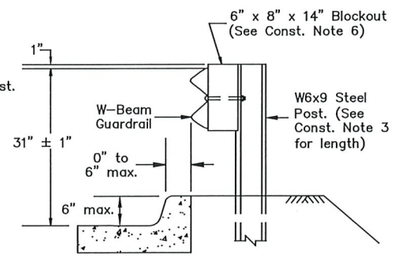

TYPE III POST INSTALLATION

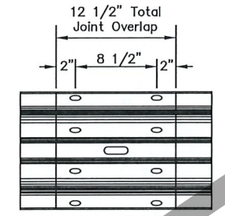

SPLICE DETAIL

(At mid span between posts only. Bolts not shown for clarity)

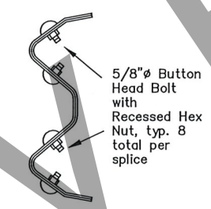

SPLICE CROSS-SECTION

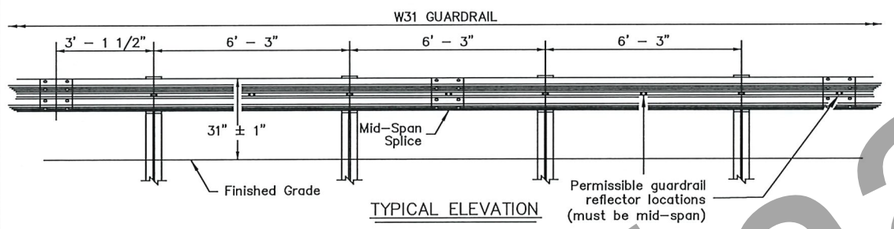

TYPICAL ELEVATION

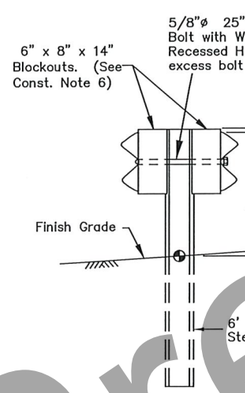

TYPE IV DOUBLE SIDED INSTALLATION

GUARDRAIL REFLECTOR

(See Const. Note 5)

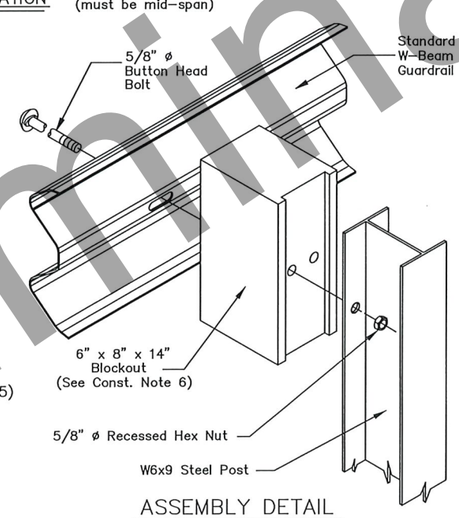

ASSEMBLY DETAIL

(Type I post shown)

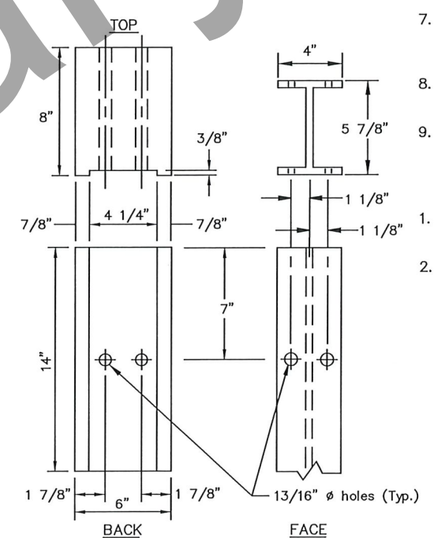

BACK
6" x 8" BLOCKOUT

FACE
W6x9 STEEL POST

CONSTRUCTION NOTES:

1. Provide hardware compliant with the Task Force 13 (TF13) Guide to Standardized Roadside Safety Hardware.
2. See Standard Plan G-00 for hardware details not shown on this drawing.
3. See Standard Plan G-10 for post lengths corresponding to different combinations of slope and behind-post embankment width.
4. Typical post spacing is 6'-3" center to center.
5. Attach guardrail reflector to guardrail using a 5/8" button head bolt with 5/8" recessed head hex nut and steel washer at location shown in the Typical Elevation. Install reflectors every 25' on tangents and every 12.5' on curves starting 100' before the P.C. and ending 100' after the P.T.
6. Use wood or synthetic blockouts designed, tested, and passed per MASH for use with steel posts. Either bolt hole on the blockout may be used for attachment.
7. Use a 25 linear foot transition to match differing height of existing or new rail elements and end treatments - see Standard Plan G-11.
8. W6x8.5 steel post may be substituted for W6x9 steel post.
9. Install flexible delineators on guardrail posts when called for in the contract. See Standard Plan G-00 for guardrail flexible delineator details.

DESIGN NOTES:

1. No fixed objects allowed within 36" of the back side of guardrail post.
2. This barrier is acceptable under MASH Tests 3-10 and 3-11.

State of Alaska DOT&PF

STEEL POST W31 GUARDRAIL

G-05.11S

STANDARD PLAN G-05.11S

Preliminary Plans

PLANS DEVELOPED BY: STATE OF ALASKA DEPARTMENT OF TRANSPORTATION & PUBLIC FACILITIES, NORTHERN REGION, 2301 PEGER ROAD, FAIRBANKS, AK 99709 (907)451-2200
R:\Projects\Drafting Special Projects\Working folder\HWY\Little Goldstream\00476_V-G0511S Wed, Jul/01/20 01:12pm

STATE	PROJECT DESIGNATION	YEAR	SHEET NO.	TOTAL SHEETS
ALASKA	PENDING/NFHWY00476	2020	V14	V32

G-10.20 SHEET 1 of 1

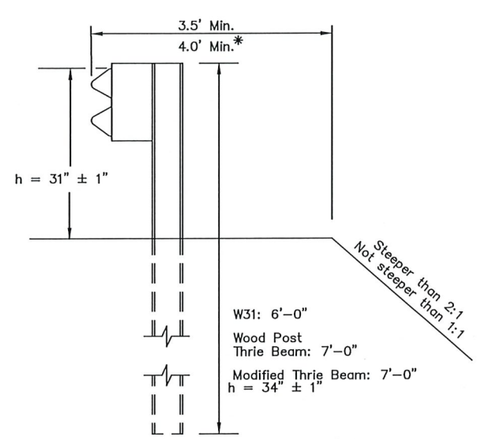

* with Modified Thrie Beam

CASE 1

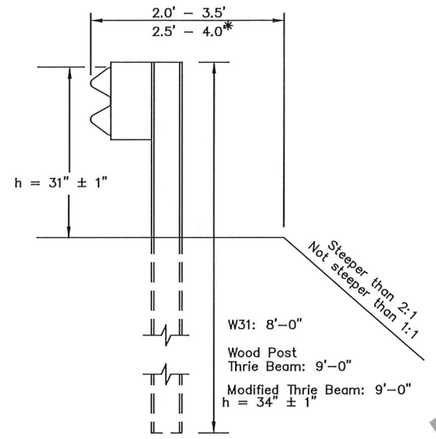

* with Modified Thrie Beam

CASE 2

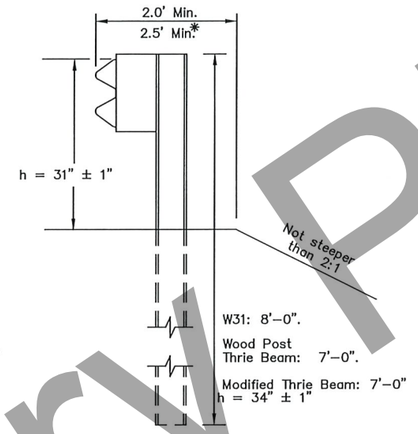

CASE 3

CONSTRUCTION NOTES:

1. This drawings is to be used for post length determination only. See Plans for slopes and behind-post embankment widths.
2. To determine post length, identify the case that matches site conditions and read the length corresponding to the pertinent guardrail type.
3. These dimensions apply to both curbed and uncurbed section.
4. Case 1, 2 and 3 are shown with steel posts. Wood posts may be substituted when allowed by specifications. Wood Post Thrie Beam installations must use wood posts only.
5. Case 4 and 5 apply to W31 guardrail only.

DESIGN NOTES:

1. No fixed objects allowed within 36" of the back of post for Cases 1, 2 & 3.
2. No fixed objects allowed within 48" of the back of post for Cases 4 & 5.

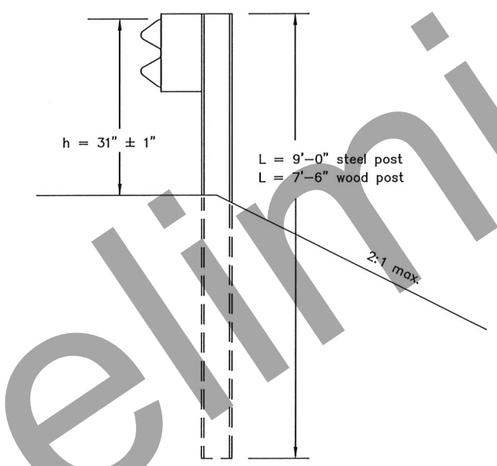

CASE 4
(See Note 5)

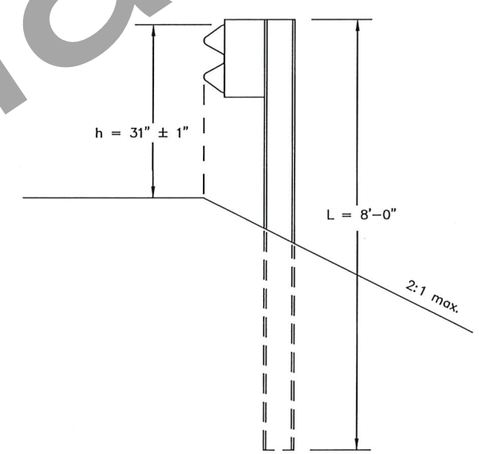

CASE 5
(See Note 5)

State of Alaska DOT&PF

GUARDRAIL
POST INSTALLATION

G-10.20

STANDARD PLAN G-10.20

Preliminary Plans

PLANS DEVELOPED BY: STATE OF ALASKA DEPARTMENT OF TRANSPORTATION & PUBLIC FACILITIES, NORTHERN REGION, 2301 PEGER ROAD, FAIRBANKS, AK 99709 (907)451-2200
R:\Projects\Drafting Special Projects\Working folder\HWY\Little Goldstream\00476_V-G1020 Wed, Jul/01/20 01:12pm

STATE	PROJECT DESIGNATION	YEAR	SHEET NO.	TOTAL SHEETS
ALASKA	PENDING/NFHWY00476	2020	V15	V32

G-20.12 SHEET 1 of 1

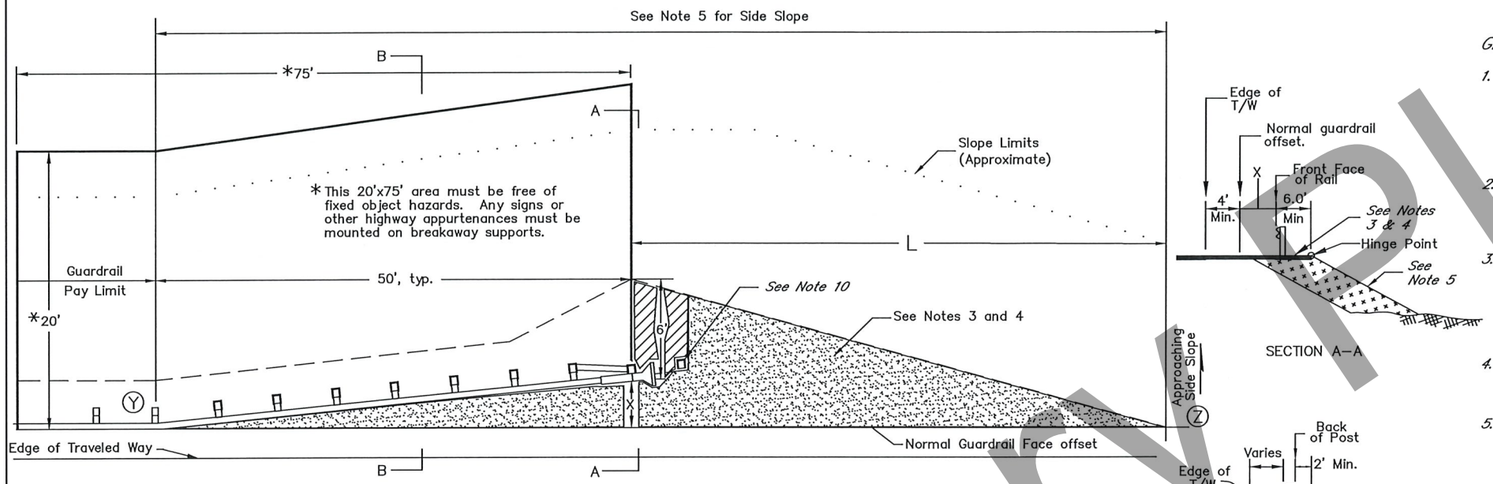

STANDARD GUARDRAIL TERMINAL WIDENING DETAIL

SECTION A–A

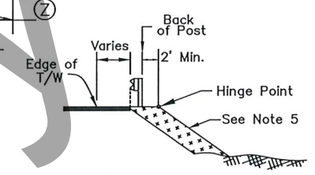

SECTION B–B
(Applies to both details)

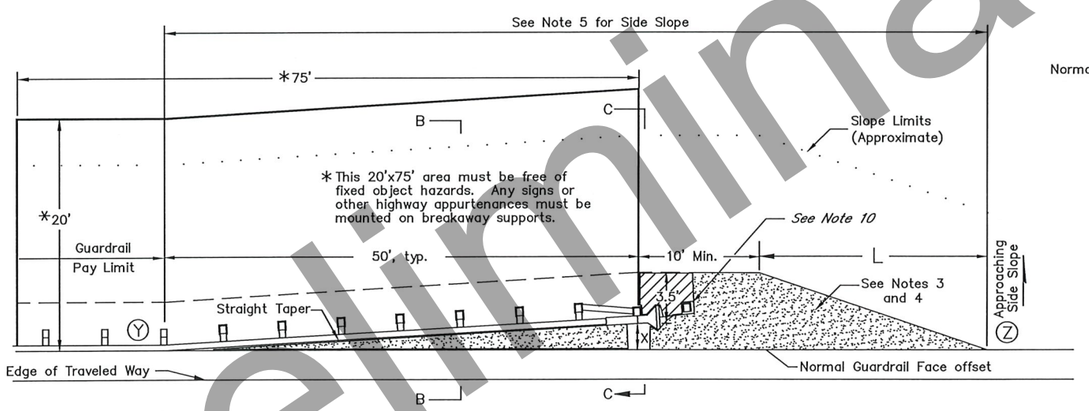

ALTERNATE GUARDRAIL TERMINAL WIDENING DETAIL

(USE ONLY WHEN LIMITED RIGHT–OF–WAY OR LIMITING SITE CONDITIONS MAKE THE STANDARD DETAIL INFEASIBLE)

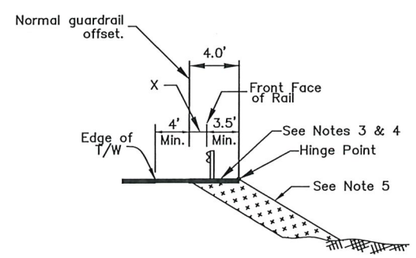

SECTION C–C

X=End offset. See manufacturer's information for the range of acceptable end offsets for each MASH compliant terminal.

Taper Lengths (L) for Common End Offsets (X)		
End Offset	Standard Detail	Alternate Detail
0'	24.0'	13.0'
1'	26.0'	17.0'
1.5'	28.0'	19.0'
2'	30.0'	21.0'
2.5'	32.0'	22.0'
4'	37.0'	28.0'
Interpolate if the end offset falls between table values		

GENERAL NOTES

1. This Std. Plan applies to all MASH approved guardrail end terminals (GETs). The alternate detail may only be used with parallel or tangent GETs. The terminal details shown are for illustration only – see manufacturer's drawings for actual post, rail, strut, etc. configuration and layout.
2. Use this Std. Widening Detail for all GETs except when limited right–of–way or limiting site conditions make the use of the Std. Widening Detail infeasible. In that case, the alternate detail is permissable.
3. Construct the shaded areas to match the slope of the adjacent shoulder. The slope may be increased to 10:1 if identified in the plans or when approved by the engineer. Match the slope when the shoulder slopes toward the road as well as away from the road.
4. On paved roads, the shaded areas shall be paved. On gravel roads, surface the shaded areas with the same materials used to surface the travel lanes.
5. From point Ⓨ to point Ⓩ make the side slope match the approaching side slope except where it is flatter than 4:1. In that case, the slope may be steepened to 4:1.
6. Attach a flexible marker at the beginning of each GET.
7. The max. allowable height for foundation tubes or other steel components of terminal post breakaway systems is 4" above the surrounding grade.
8. The details on this sheet do not apply to W31 Downstream End Anchors (Std Plan G–14).
9. The details on this sheet apply to GETs on both the approach and downstream ends on two–way undivided roads and to any downstream MASH compliant GETs.
10. Some MASH GET systems have an additional post/anchor at the approximate location shown. If this post/anchor is present do not pave the diagonally hatched area. If not present, pave the diagonally hatched area also.

State of Alaska DOT&PF

WIDENING FOR GUARDRAIL END TERMINALS

G–20.12

STANDARD PLAN G–20.12

Preliminary Plans

PLANS DEVELOPED BY: STATE OF ALASKA DEPARTMENT OF TRANSPORTATION & PUBLIC FACILITIES, NORTHERN REGION, 2301 PEGER ROAD, FAIRBANKS, AK 99709 (907)451–2200
R:\Projects\Drafting Special Projects\Working folder\HWY\Little Goldstream\00476_V–G2012 Wed, Jul/01/20 01:12pm

STATE	PROJECT DESIGNATION	YEAR	SHEET NO.	TOTAL SHEETS
ALASKA	PENDING/NFHWY00476	2020	V16	V32

G-26.00 SHEET 1 of 3

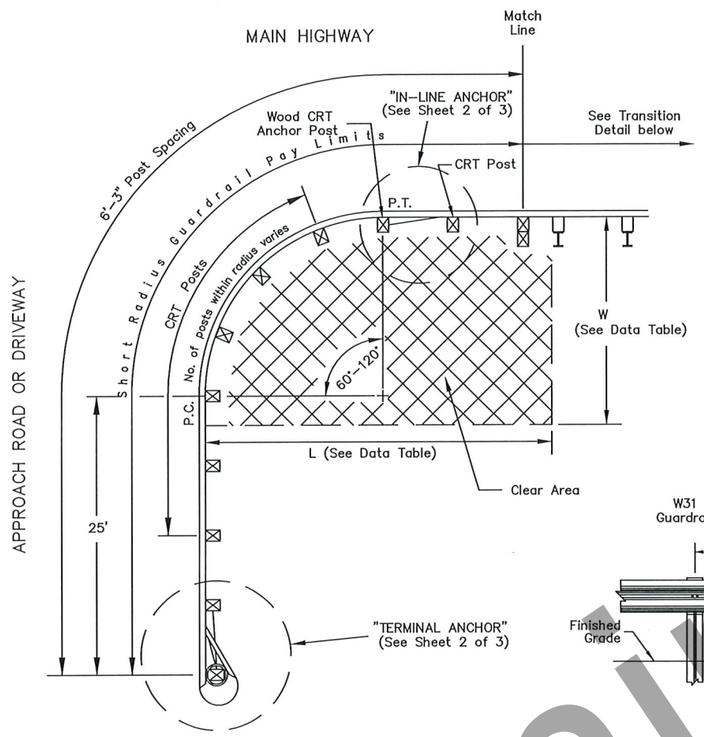

SHORT RADIUS GUARDRAIL PLAN

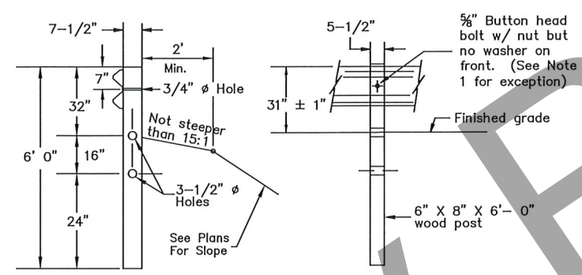

CONTROLLED RELEASE TERMINAL (CRT) POST

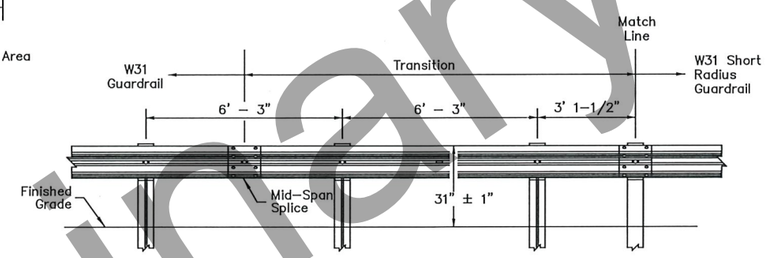

TRANSITION TO W31 GUARDRAIL – TYPE I

(As viewed from Main Highway)
(See Construction Note 2)

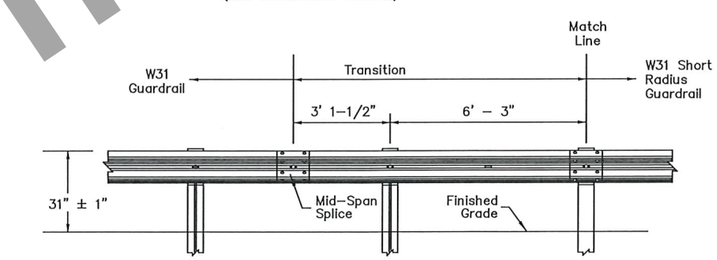

TRANSITION TO W31 GUARDRAIL TYPE II

(As viewed from Main Highway)
(See Construction Note 2)

DATA TABLE *

Curve Radius, Ft. (Rounded)	Curve Length	Number of Rail Sections	Clear Area Length (L)	Clear Area Width (W)	** No. of Posts
8'	12.50'	1.0	25	15	5
12'	18.75'	1.5	25	15	6
16'	25.00'	2.0	30	15	7
20'	31.25'	2.5	33	15	8
24'	37.50'	3.0	37	20	9
28'	43.75'	3.5	40	20	10
32'	50.00'	4.0	45	20	11
36'	56.25'	4.5	50	20	12

* The table applies only to 90° approaches or driveways.
* 36 feet is the maximum allowable radius for this system.
**Number of CRT posts includes one for the In-Line Anchor.

CONSTRUCTION NOTES:

1. Do not bolt rail to central post on 8' radius CRT.
2. Steel posts are shown in the transition. Wood post may be substituted when allowed by the Specifications.

DESIGN NOTES:

1. Use the W31 short radius guardrail system to shield hazards at the intersection of a main highway with a minor road or driveway. Typical application include interruptions in guardrail runs caused by intersecting roadways
2. The short radius guardrail Terminal Anchor shown is for use on low speed (<45 mph) approach roads or driveways where motorists are required to stop or yield. Do not use this Terminal Anchor for high speed approach roads or driveways when a MASH approved end treatment is required.
3. The Clear Area shall be free of fixed object hazards. Any signs or other highway appurtenances in the clear area must be mounted on MASH compliant breakaway supports.
4. Connections to other guardrail systems (e.g. bridge rails and end treatments) and not provided on this drawing. Other details may be needed for this.
5. Short Radius Guardrail on 60 to 90 degree approaches are allowed provided they are constructed with posts at the P.C. and P.T. and the posts are placed on a uniform 6'-3" spacing.
6. When Short Radius Guardrail transitions to guardrail not at 31" ± 1" top-of-rail height, transition height over a 25 foot length.

REVISIONS

Date	Description	By

State of Alaska
Department of Transportation
& Public Facilities

W31 SHORT
RADIUS GUARDRAIL

G-26.00 Sht. 1 of 3

STANDARD PLAN G-26.00
SHEET 1 OF 3

Preliminary Plans

PLANS DEVELOPED BY: STATE OF ALASKA DEPARTMENT OF TRANSPORTATION & PUBLIC FACILITIES, NORTHERN REGION, 2301 PEGER ROAD, FAIRBANKS, AK 99709 (907)451-2200
R:\Projects\Drafting Special Projects\Working folder\HWY\Little Goldstream\g2600_NR-g26.00p1 Wed, Jul/01/20 01:12pm

STATE	PROJECT DESIGNATION	YEAR	SHEET NO.	TOTAL SHEETS
ALASKA	PENDING/NFHWY00476	2020	V17	V32

G-26.00 SHEET 2 of 3

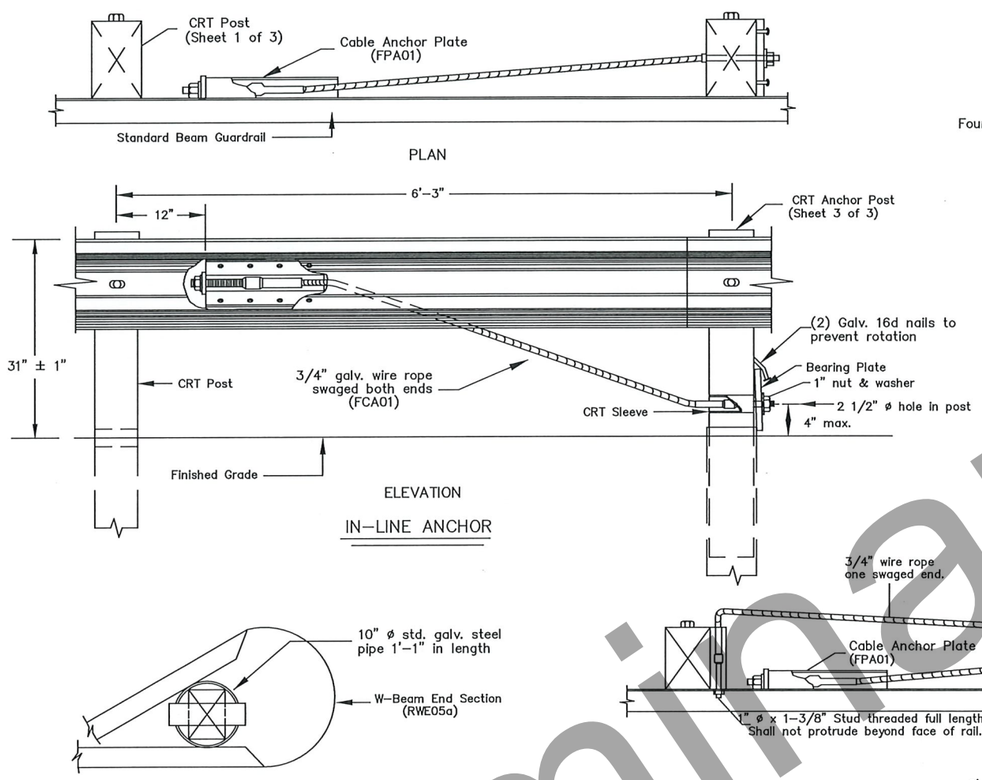

IN-LINE ANCHOR

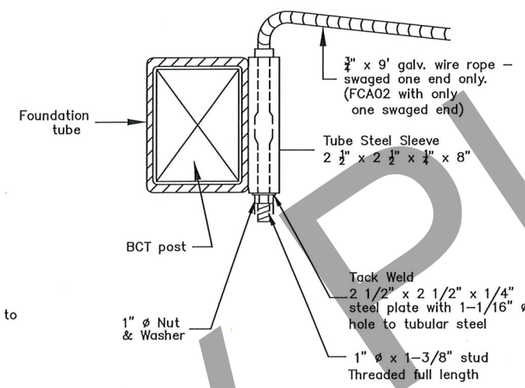

SIDE CABLE ATTACHMENT

CONSTRUCTION NOTES

1. See Standard Plan G-00 and G-05 for details not shown here.
2. All covered hardware must comply with the AASHTO/AGC/ARTBA "A Guide to Standardized Highway Barrier Hardware", latest edition. Designators are given in parenthesis, when possible.

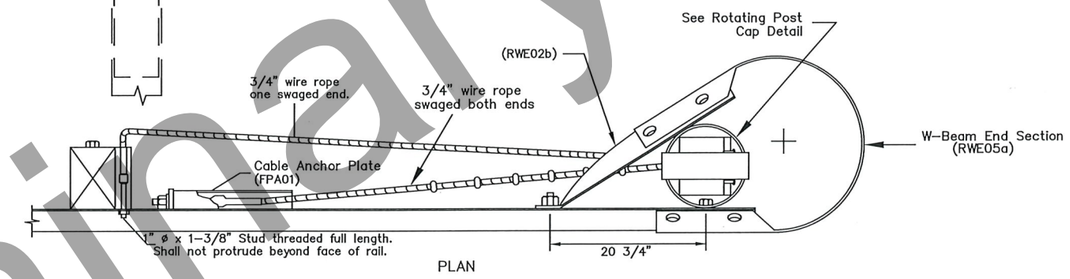

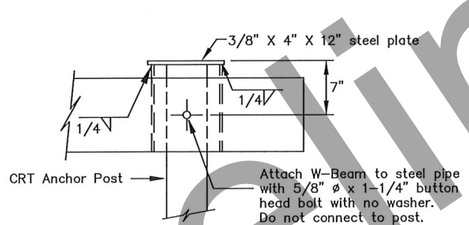

ROTATING POST CAP

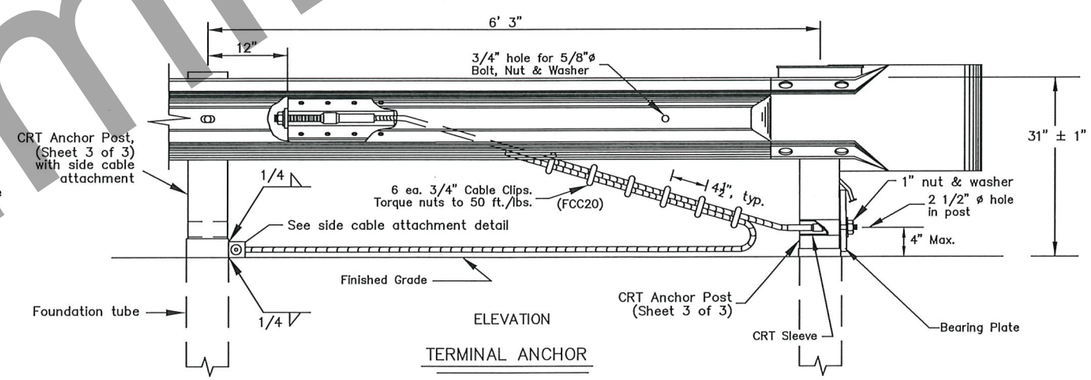

TERMINAL ANCHOR

REVISIONS		
Date	Description	By

State of Alaska
Department of Transportation
& Public Facilities

W31 SHORT
RADIUS GUARDRAIL

G-26.00 Sht. 2 of 3

STANDARD PLAN G-26.00
SHEET 2 OF 3

Preliminary Plans

PLANS DEVELOPED BY: STATE OF ALASKA DEPARTMENT OF TRANSPORTATION & PUBLIC FACILITIES, NORTHERN REGION, 2301 PEGER ROAD, FAIRBANKS, AK 99709 (907)451-2200
R:\Projects\Drafting Special Projects\Working folder\HWY\Little Goldstream\g2600_NR-g26.00p2 Wed, Jul/01/20 01:12pm

STATE	PROJECT DESIGNATION	YEAR	SHEET NO.	TOTAL SHEETS
ALASKA	PENDING/NFHWY00476	2020	V18	V32

G-26.00 SHEET 3 of 3

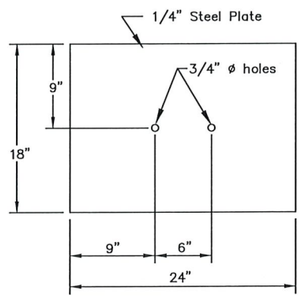

FOUNDATION TUBE SOIL PLATE

(PLS03)

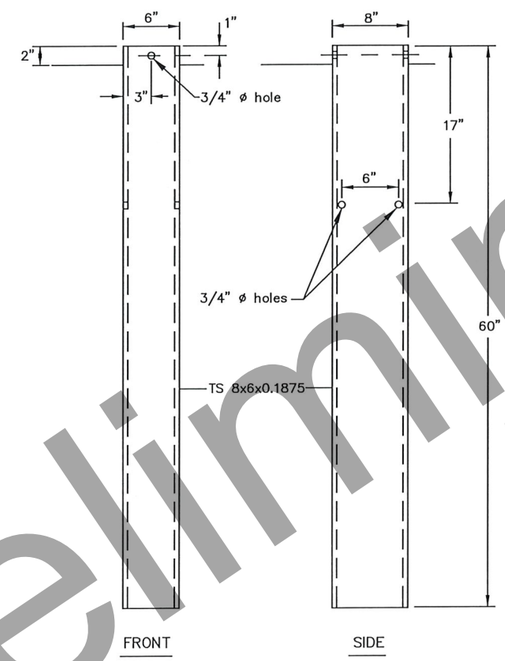

FOUNDATION TUBE

(PTE05)

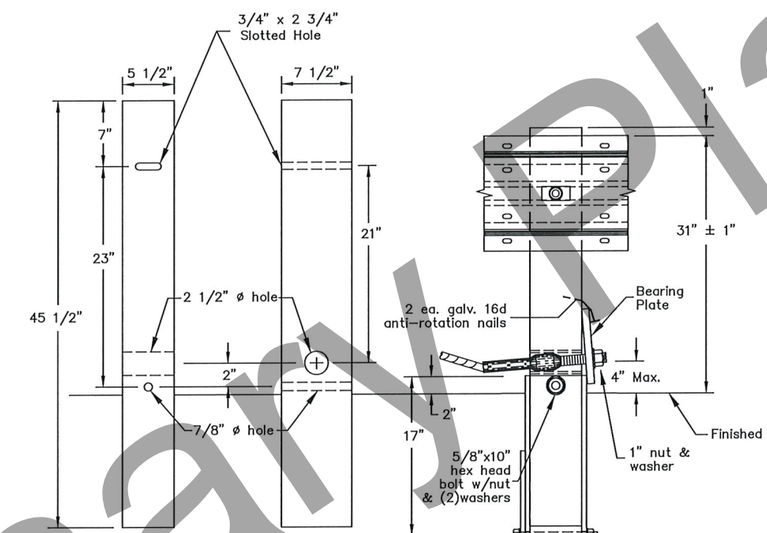

WOOD POST

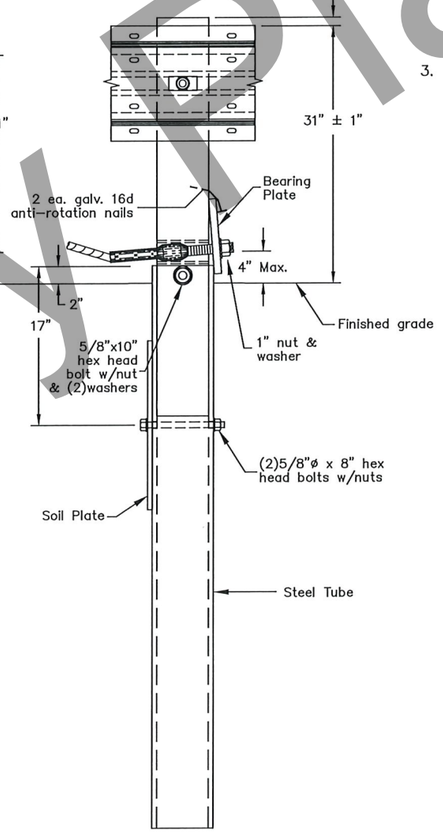

ASSEMBLY

GENERAL NOTES:

1. Hardware details not shown here shall conform to Plans G-05W and G-00.
2. Comply with the AASHTO/AGC/ARTBA "A Guide to Standardized Highway Barrier Hardware", latest edition, for all covered guardrail hardware.
3. Not all bolt and nuts are shown for clarity purposes.

REVISIONS		
Date	Description	By

State of Alaska
Department of Transportation
& Public Facilities

W31 SHORT
RADIUS GUARDRAIL

G-26.00 Sht. 3 of 3

STANDARD PLAN G-26.00
SHEET 3 OF 3

Preliminary Plans

PLANS DEVELOPED BY: STATE OF ALASKA DEPARTMENT OF TRANSPORTATION & PUBLIC FACILITIES, NORTHERN REGION, 2301 PEGER ROAD, FAIRBANKS, AK 99709 (907)451-2200
R:\Projects\Drafting Special Projects\Working folder\HWY\Little Goldstream\g2600_NR-g26.00p3 Wed, Jul/01/20 01:12pm

STATE	PROJECT DESIGNATION	YEAR	SHEET NO.	TOTAL SHEETS
ALASKA	PENDING/NFHWY00476	2020	V19	V32

G-46.12 SHEET 1 of 2

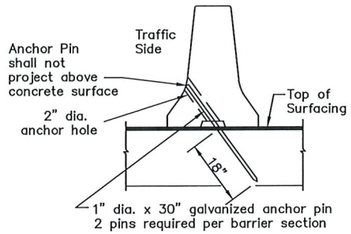

ANCHORING DETAIL

(Anchor when required by plans or as directed)

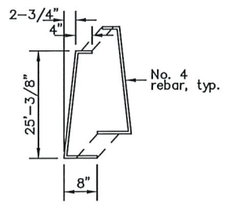

MEDIAN BARRIER STIRRUP

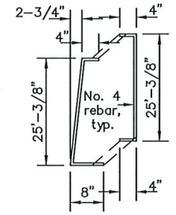

SHOULDER BARRIER STIRRUP

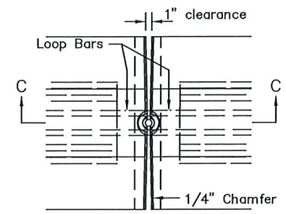

PLAN

For details not shown see End Views A-A and B-B

CONNECTING PIN AND LOOP CONNECTION

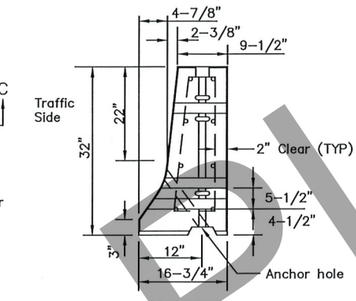

SHOULDER BARRIER

Note:
Dimensions marked with a dot • are to the intersection point of the barrier slopes.

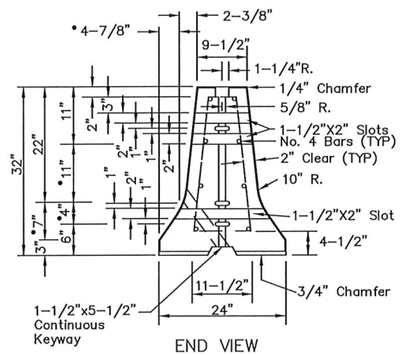

END VIEW A-A

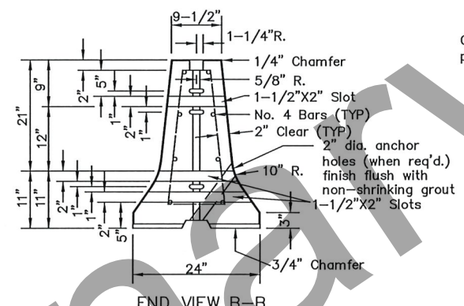

END VIEW B-B

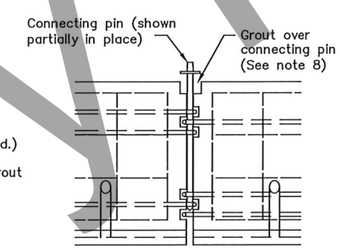

SECTION C-C

For details not shown see End Views A-A and B-B

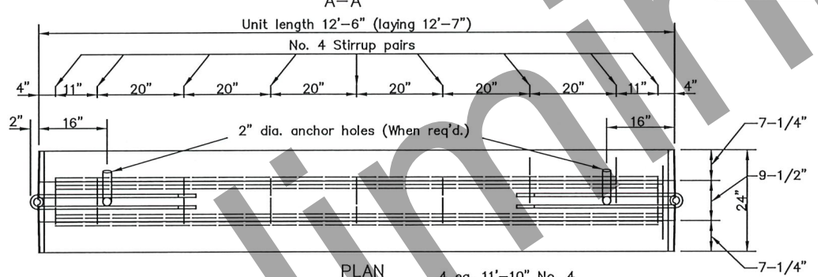

PLAN

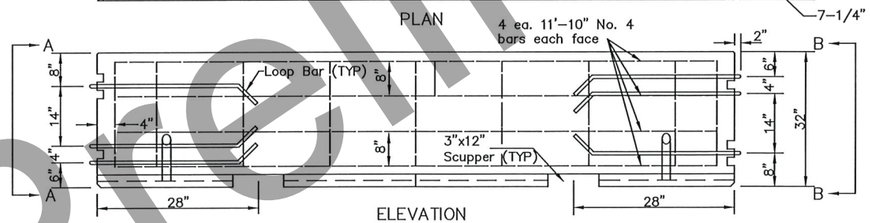

ELEVATION

MEDIAN BARRIER

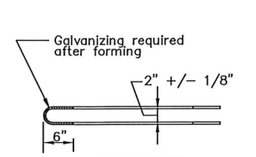

TOP VIEW

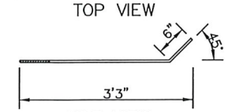

SIDE VIEW

LOOP BAR DETAIL

(3/4" dia. – A36 Steel)

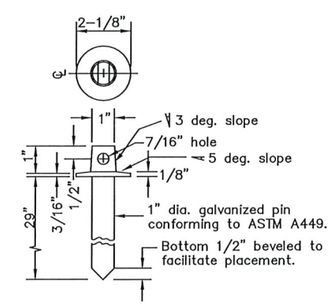

CONNECTING PIN DETAIL

GENERAL NOTES

1. Barriers may be used for temporary and permanent applications.
2. Provide 36" unobstructed smooth deflection area behind barrier for unanchored applications. Provide 12" unobstructed smooth deflection area behind barrier for anchored applications.
3. When anchored, install anchor pins on the side facing traffic. Precast barrier used as permanent median barrier in medians less than 8' in width shall be anchored to the roadway. When anchored in medians, install anchor pins on both sides of the barrier.
4. Provide 2" clearance between all metal reinforcement and the nearest face of concrete unless otherwise shown.
5. Normal use of precast barrier units is restricted to curvatures with radii greater than 770'.
6. Use narrow base shoulder barrier only at locations with full height backfill or equivalent structural support placed behind barrier.
7. When scuppers are not required plug them with a minimum 2" of grout.
8. Concrete grout for grouting over pins, pinning holes or grouting of scuppers shall be a non-shrinking grout, weak in strength and of thick consistency.
9. This precast concrete barrier is NCHRP 350 TL-3 approved.

REVISIONS

Date	Description	By
4/28/10	Correct dims, Note 1	KJS
1/16/17	Minor corrections	LRG

State of Alaska DOT&PF

PRECAST CONCRETE "F" SHAPE BARRIER

G-46.12

STANDARD PLAN G-46.12
SHEET 1 OF 2

Preliminary Plans

PLANS DEVELOPED BY: STATE OF ALASKA DEPARTMENT OF TRANSPORTATION & PUBLIC FACILITIES, NORTHERN REGION, 2301 PEGER ROAD, FAIRBANKS, AK 99709 (907)451-2200
R:\Projects\Drafting Special Projects\Working folder\HWY\Little Goldstream\g4612_NR-g46.12p1 Wed, Jul/01/20 01:12pm

STATE	PROJECT DESIGNATION	YEAR	SHEET NO.	TOTAL SHEETS
ALASKA	PENDING/NFHWY00476	2020	V20	V32

G-46.12 SHEET 2 of 2

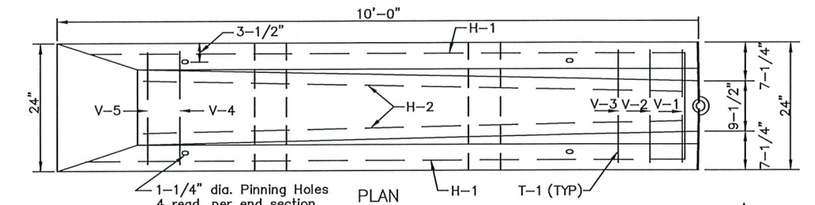

PLAN

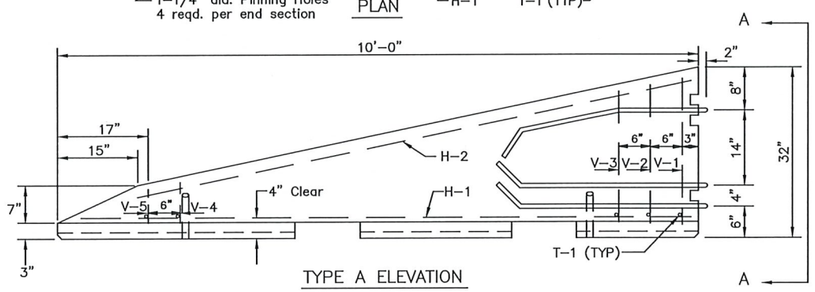

TYPE A ELEVATION

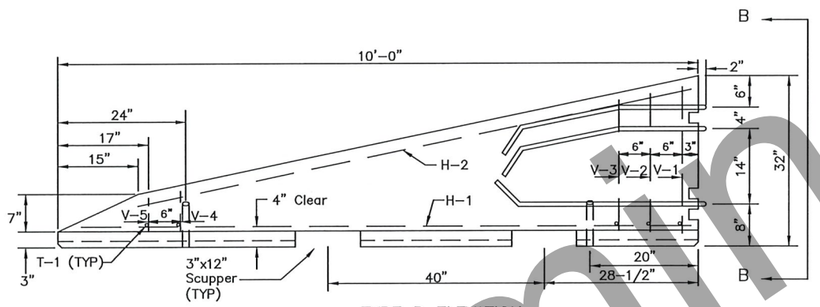

TYPE B ELEVATION

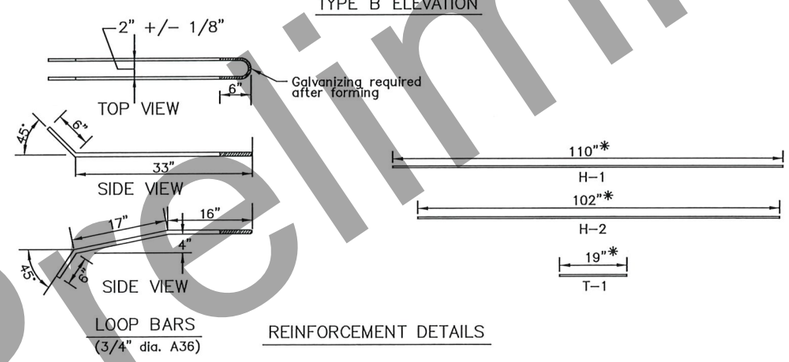

REINFORCEMENT DETAILS

• Dimensions marked thus are to the Intersection point of the barrier slopes.

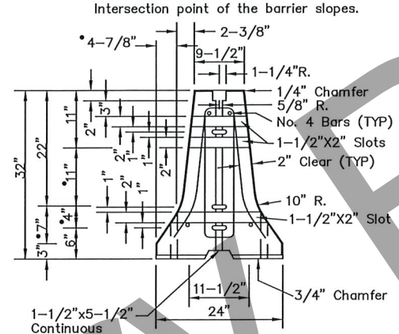

END VIEW
A-A

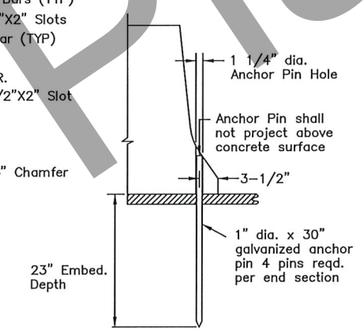

ANCHOR PIN
PLACEMENT DETAIL

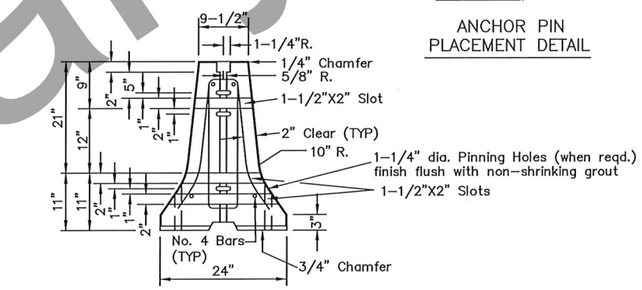

END VIEW B-B

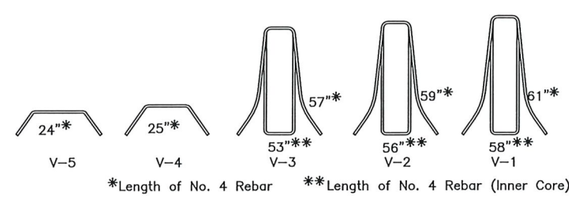

REINFORCING STEEL

GENERAL NOTES

1. Use tapered end sections only where:
   a. Barriers terminate outside the clear zone, or
   b. The regulatory speed limit is 25 MPH or below, or 30 MPH if the Engineer determines NCHRP 350 or MASH compliant end treatments are unfeasible.
2. Provide a minimum of two inches clear cover for reinforcing steel bars except as shown otherwise.
3. Galvanize all exposed hardware in accordance with AASHTO M 232.
4. Provide reinforcing steel bars conforming to AASHTO M 31, grade 60.
5. Provide anchor pins and anchor pins conforming to ASTM A36 steel.
6. Provide four anchor pins per unit.

REVISIONS

Date	Description	By
4/28/10	Correct Dimensioning	KJS
1/16/17	Revised Concrete	LRG

State of Alaska DOT&PF

PRECAST CONCRETE
"F" SHAPE BARRIER
TAPERED END SECTION

G-46.12

STANDARD PLAN G-46.12
SHEET 2 OF 2

Preliminary Plans

PLANS DEVELOPED BY: STATE OF ALASKA DEPARTMENT OF TRANSPORTATION & PUBLIC FACILITIES, NORTHERN REGION, 2301 PEGER ROAD, FAIRBANKS, AK 99709 (907)451-2200
R:\Projects\Drafting Special Projects\Working folder\HWY\Little Goldstream\g4612_NR-g46.12p2 Wed, Jul/01/20 01:12pm

STATE	PROJECT DESIGNATION	YEAR	SHEET NO.	TOTAL SHEETS
ALASKA	PENDING/NFHWY00476	2020	V21	V32

I-81.00 SHEET 1 of 1

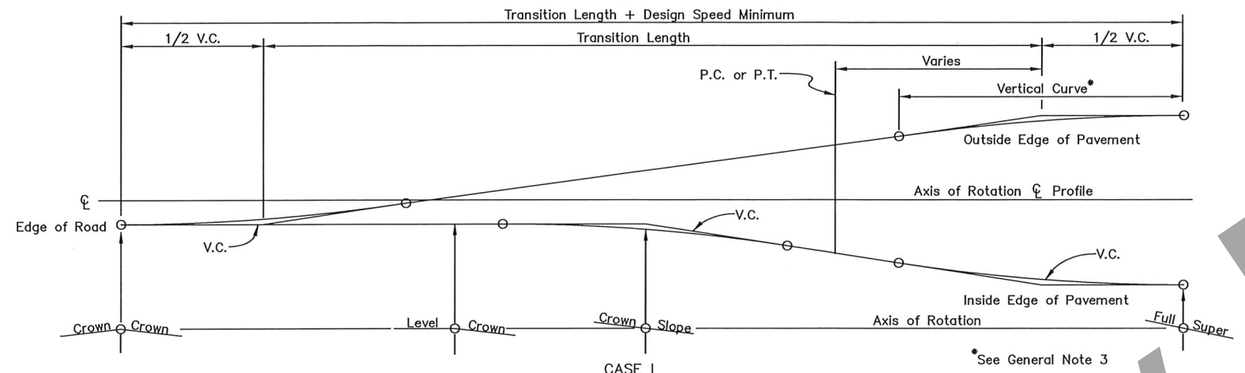

CASE I
PAVEMENT REVOLVED ABOUT CENTERLINE

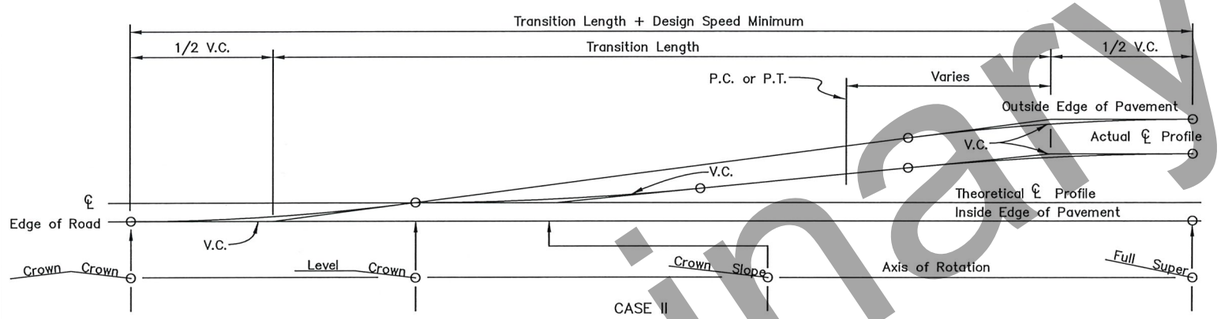

CASE II
PAVEMENT REVOLVED ABOUT INSIDE EDGE
TO BE USED WHERE DRAINAGE IS THE GOVERNING CONSIDERATION

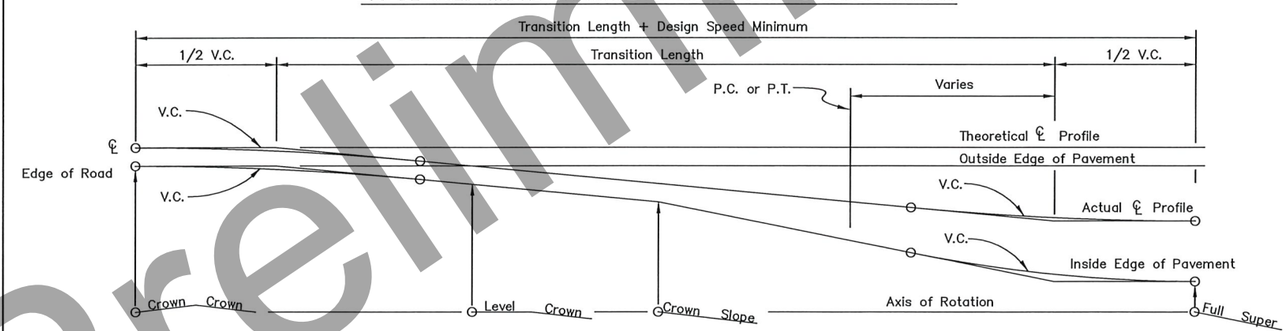

CASE III
PAVEMENT REVOLVED ABOUT OUTSIDE EDGE TO BE
USED WHERE OVERALL APPEARANCE IS THE MAIN CONTROL

GENERAL NOTES:

1. Location of transition length relative to horizontal curves will be shown on the plans or as directed by the Engineer.
2. Widening for guardrail or curvature will not change the location of the axis of rotation.
3. Minimum vertical curve length in feet shall be the numerical value of the design speed in M.P.H.
4. Superelevation shall be built into the subgrade and carried through the shoulders.

REVISIONS		
Date	Description	By

State of Alaska
Department of Transportation
& Public Facilities

SUPERELEVATION TRANSITION

I-81.00

STANDARD PLAN I-81.00

Preliminary Plans

PLANS DEVELOPED BY: STATE OF ALASKA DEPARTMENT OF TRANSPORTATION & PUBLIC FACILITIES, NORTHERN REGION, 2301 PEGER ROAD, FAIRBANKS, AK 99709 (907)451-2200
R:\Projects\Drafting Special Projects\Working folder\HWY\Little Goldstream\00476_V-I8100 Wed, Jul/01/20 01:12pm

STATE	PROJECT DESIGNATION	YEAR	SHEET NO.	TOTAL SHEETS
ALASKA	PENDING/NFHWY00476	2020	V22	V32

M-13.01 SHEET 1 of 1

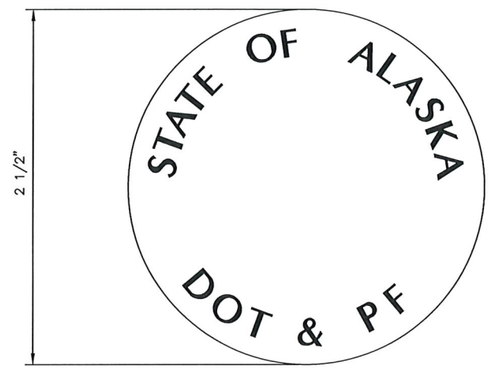

GENERAL NOTES:

1. For Structures under 200' total length: provide 1 monument.
2. For Structures 200' or over: provide 2 Monuments.
3. Monuments shall be located as directed by the Engineer.

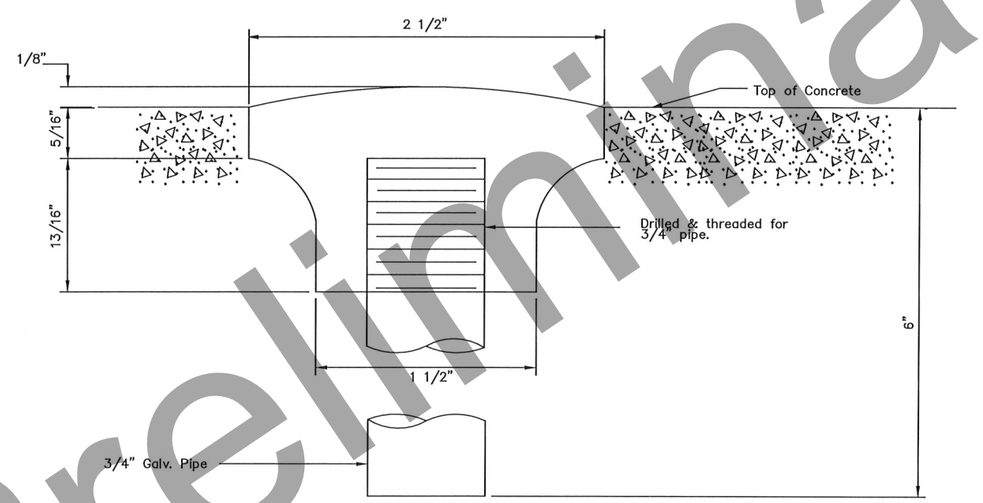

SURVEY MONUMENT

REVISIONS		
Date	Description	By
5/15/89	Revised Cap Markings	Gdo

State of Alaska
Department of Transportation
& Public Facilities

SURVEY MONUMENT

M-13.01

STANDARD PLAN M-13.01

Preliminary Plans

PLANS DEVELOPED BY: STATE OF ALASKA DEPARTMENT OF TRANSPORTATION & PUBLIC FACILITIES, NORTHERN REGION, 2301 PEGER ROAD, FAIRBANKS, AK 99709 (907)451-2200
R:\Projects\Drafting Special Projects\Working folder\HWY\Little Goldstream\m1301_NR-m1301 Wed, Jul/01/20 01:12pm

STATE	PROJECT DESIGNATION	YEAR	SHEET NO.	TOTAL SHEETS
ALASKA	PENDING/NFHWY00476	2020	V23	V32

M-16.01 SHEET 1 of 1

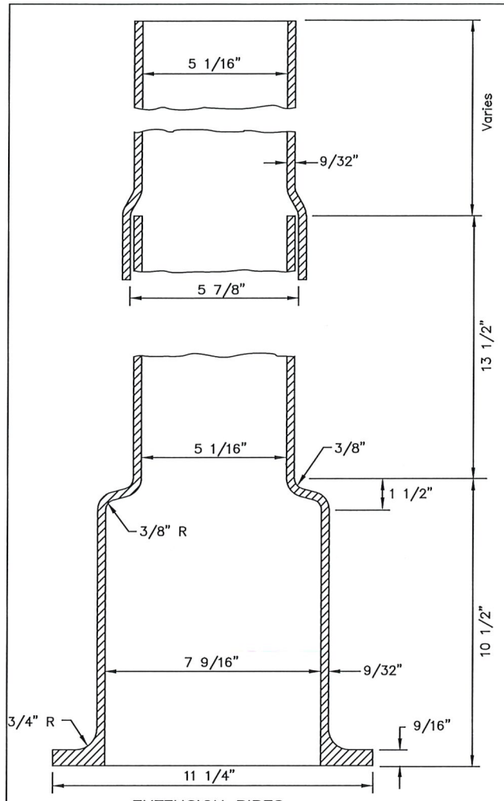

EXTENSION PIPES

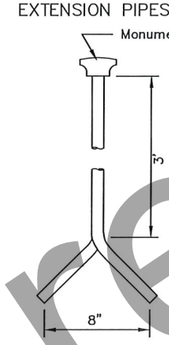

MONUMENT DETAIL

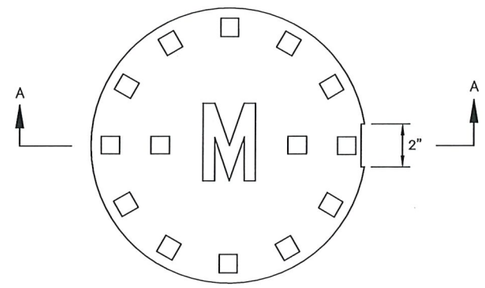

PLAN VIEW ACCESS COVER

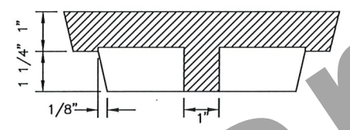

SECTION A-A

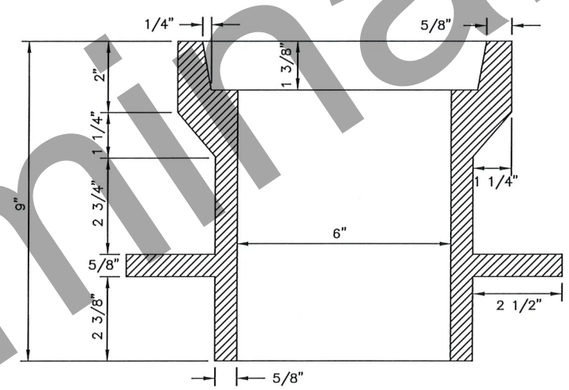

MONUMENT CASE

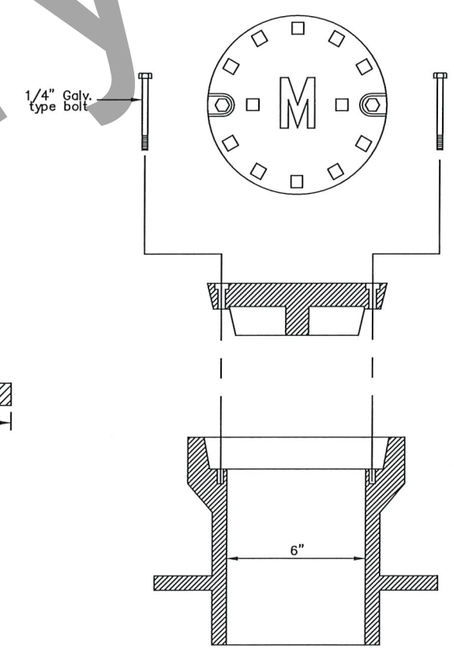

BOLTING MONUMENT CASE ASSEMBLY
(See Note 2)

GENERAL NOTES:

1. Details shown are to indicate general design only. Dimensions and design may vary among the manufacturers.
2. Where monument cases are to be placed in paved area of a roadway or sidewalk, the top of the case and/or cover shall be the same elevation as the top of the finish surface with bolting type access cover.
3. Where monument cases are to be placed in a gravel surfaced roadway, the top of the case shall be placed 1'-0" below the top of the surface of the roadway.
4. In solid rock, drill a 2" Dia. hole a minimum of 1'-0" deep, fill with mortar and set cap. 3/4"x9" galvanized pipe, designated length when set in mortar.
5. The top of the monument cap shall be placed 1' ± above the bottom of the monument case.

REVISIONS

Date	Description	By
5/15/89	Revised Cap Markings	Gdo

State of Alaska
Department of Transportation
& Public Facilities

BRASS CAP MONUMENTS
& MONUMENT CASE

M-16.01

STANDARD PLAN M-16.01

Preliminary Plans

PLANS DEVELOPED BY: STATE OF ALASKA DEPARTMENT OF TRANSPORTATION & PUBLIC FACILITIES, NORTHERN REGION, 2301 PEGER ROAD, FAIRBANKS, AK 99709 (907)451-2200
R:\Projects\Drafting Special Projects\Working folder\HWY\Little Goldstream\m1601_NR-m1601 Wed, Jul/01/20 01:13pm

STATE	PROJECT DESIGNATION	YEAR	SHEET NO.	TOTAL SHEETS
ALASKA	PENDING/NFHWY00476	2020	V24	V32

M-20.14 SHEET 1 of 1

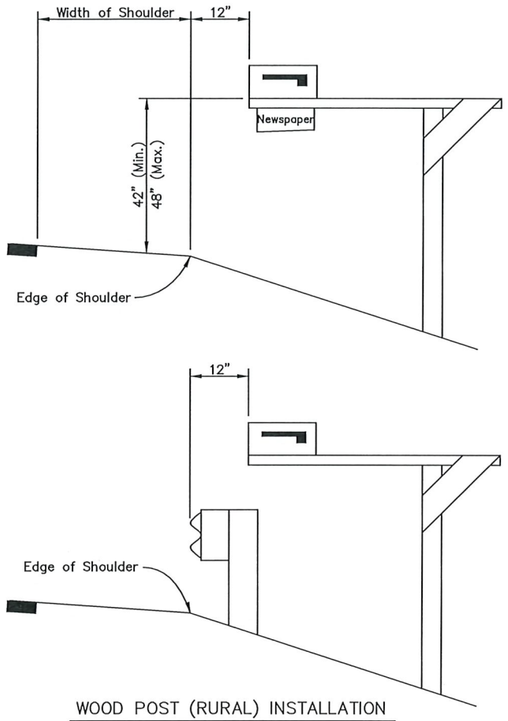

WOOD POST (RURAL) INSTALLATION

Single or Double Box

Vc = Average Daily Traffic on Cross Road (vehicles per day)

Vm = Average Daily Traffic on Main Road (vehicles per day)

n = Number of Mailboxes at Mail Stop

Posted Main Road Speed Limit	"D1" Distance (ft) n*Vc*Vm	
	≤4000	>4000
≤40	65	200
>40	65	295

Posted Main Road Speed Limit	"D2" Distance (ft) Cross Road ADT	
	≤4000	>4000
≤40	100	100
>40	150	200

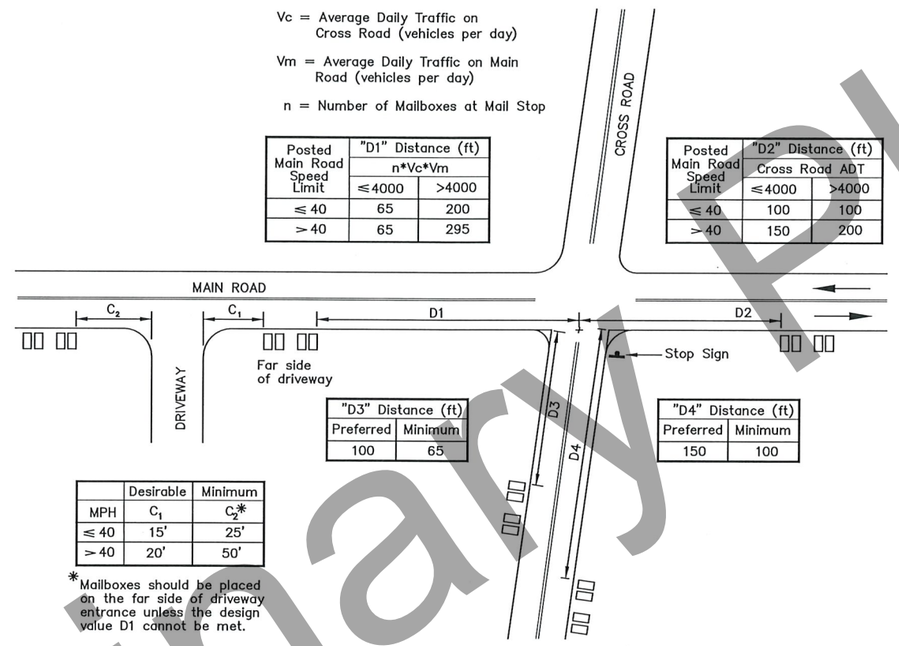

"D3" Distance (ft)	
Preferred	Minimum
100	65

"D4" Distance (ft)	
Preferred	Minimum
150	100

	Desirable	Minimum
MPH	C_1	C_2*
≤40	15'	25'
>40	20'	50'

*Mailboxes should be placed on the far side of driveway entrance unless the design value D1 cannot be met.

MAILBOX LOCATION AT INTERSECTIONS AND DRIVEWAYS

GENERAL NOTES:

1. Install mailboxes conforming to U.S. Postal Service requirements.
2. Mailbox supports shall not present a rigid, unyielding impact resistant hazard to road traffic, but shall be flexible and yielding to vehicular impact. Install crashworthy supports in accordance with Standard Plan M-23.
3. Installation shall be on the right side of roadway in the direction of mail carrier travel with the exception of one-way streets where they may be placed on either side.
4. Locate mailboxes to minimize dangers to road traffic, carriers and postal recipients.
5. Provide a minimum shoulder width of 8' unless otherwise approved by Engineer. Install single and double mailbox supports separated by at least 3', and desirably 4', from each other. More than two boxes on a single support is allowable only as shown on M-23.
6. Newspaper receptacles shall conform to the same setback and support regulations as mailboxes. Where newspaper receptacles and mailboxes are to be mounted together, the newspaper receptacle may be mounted beneath the mailbox or on the side of the mailbox support opposite the reflecting marker.

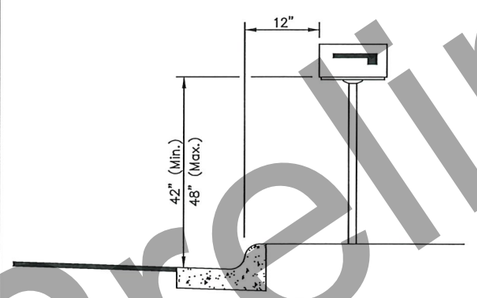

METAL POST (URBAN) INSTALLATION

Single or Double Box

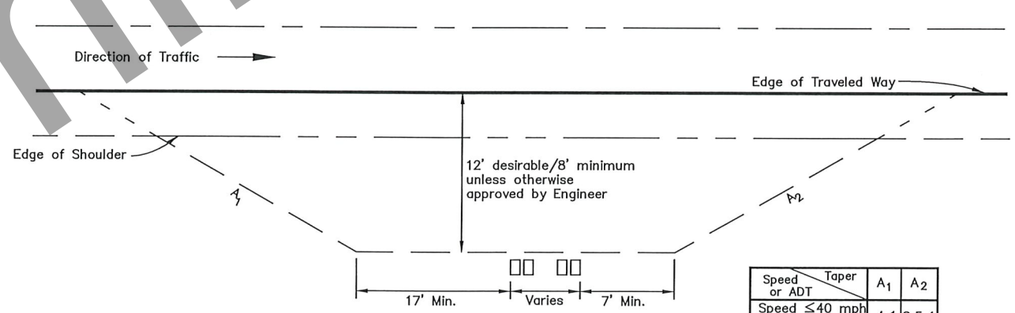

TURNOUTS FOR GROUPED BOXES

Speed or ADT \ Taper	A_1	A_2
Speed ≤40 mph and ADT ≤400	4:1	2.5:1
Speed >40 mph or ADT >400	20:1	12:1

TURNOUT TAPERS

REVISIONS		
Date	Description	By
4/28/10	Tables, details & notes	KJS
1/16/17	Revise d/w distances	LRG

State of Alaska DOT&PF

MAILBOX LOCATION

M-20.14

STANDARD PLAN M-20.14

Preliminary Plans

PLANS DEVELOPED BY: STATE OF ALASKA DEPARTMENT OF TRANSPORTATION & PUBLIC FACILITIES, NORTHERN REGION, 2301 PEGER ROAD, FAIRBANKS, AK 99709 (907)451-2200
R:\Projects\Drafting Special Projects\Working folder\HWY\Little Goldstream\m2014_NR-m2014 Wed, Jul/01/20 01:13pm

STATE	PROJECT DESIGNATION	YEAR	SHEET NO.	TOTAL SHEETS
ALASKA	PENDING/NFHWY00476	2020	V25	V32

M-23.12 SHEET 1 of 2

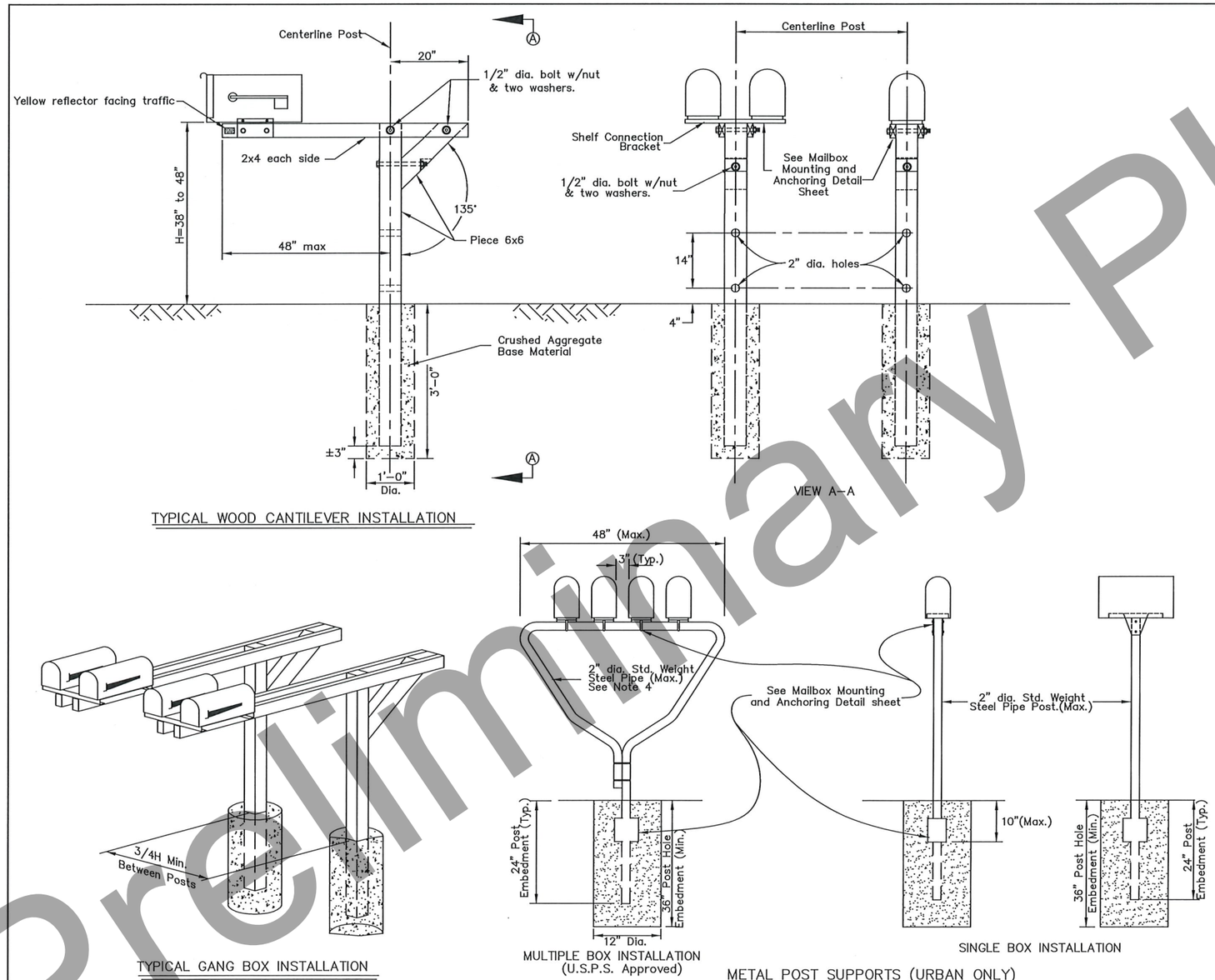

GENERAL NOTES:

1. See Standard Plan, 'Mailbox Location', for locating posts and boxes along roadway.
2. Posts shall be 6"x6" Treated Wood Post S4S or 2" (Max.) Standard Weight Steel Pipe.
3. Each support structure shall not accomodate more than two mailboxes unless the support structure conforms to the requirements of the U.S. Postal Service and is approved by the Engineer.
4. Other steel or aluminum structural sections may be used except, the stiffness properties equivalent to the 2" dia. standard weight steel pipe shall not be exceeded.
5. Reflectors shall have a minimum area of 4.5 sq. in.

REVISIONS		
Date	Description	By
9/15/91	Mod w/USPS specs.	Gdo
4/1/93	Revise Embedment Depth	Gdo
1/1/96	Del. Specs./Min. Height	Gdo

State of Alaska
Department of Transportation
& Public Facilities

MAILBOX INSTALLATION

M-23.12

STANDARD PLAN M-23.12
SHEET 1 OF 2

12/2020

Preliminary Plans

PLANS DEVELOPED BY: STATE OF ALASKA DEPARTMENT OF TRANSPORTATION & PUBLIC FACILITIES, NORTHERN REGION, 2301 PEGER ROAD, FAIRBANKS, AK 99709 (907)451-2200
R:\Projects\Drafting Special Projects\Working folder\HWY\Little Goldstream\m2312_NR-m2312 1of2 Wed, Jul/01/20 01:13pm

STATE	PROJECT DESIGNATION	YEAR	SHEET NO.	TOTAL SHEETS
ALASKA	PENDING/NFHWY00476	2020	V26	V32

M-23.12 SHEET 2 of 2

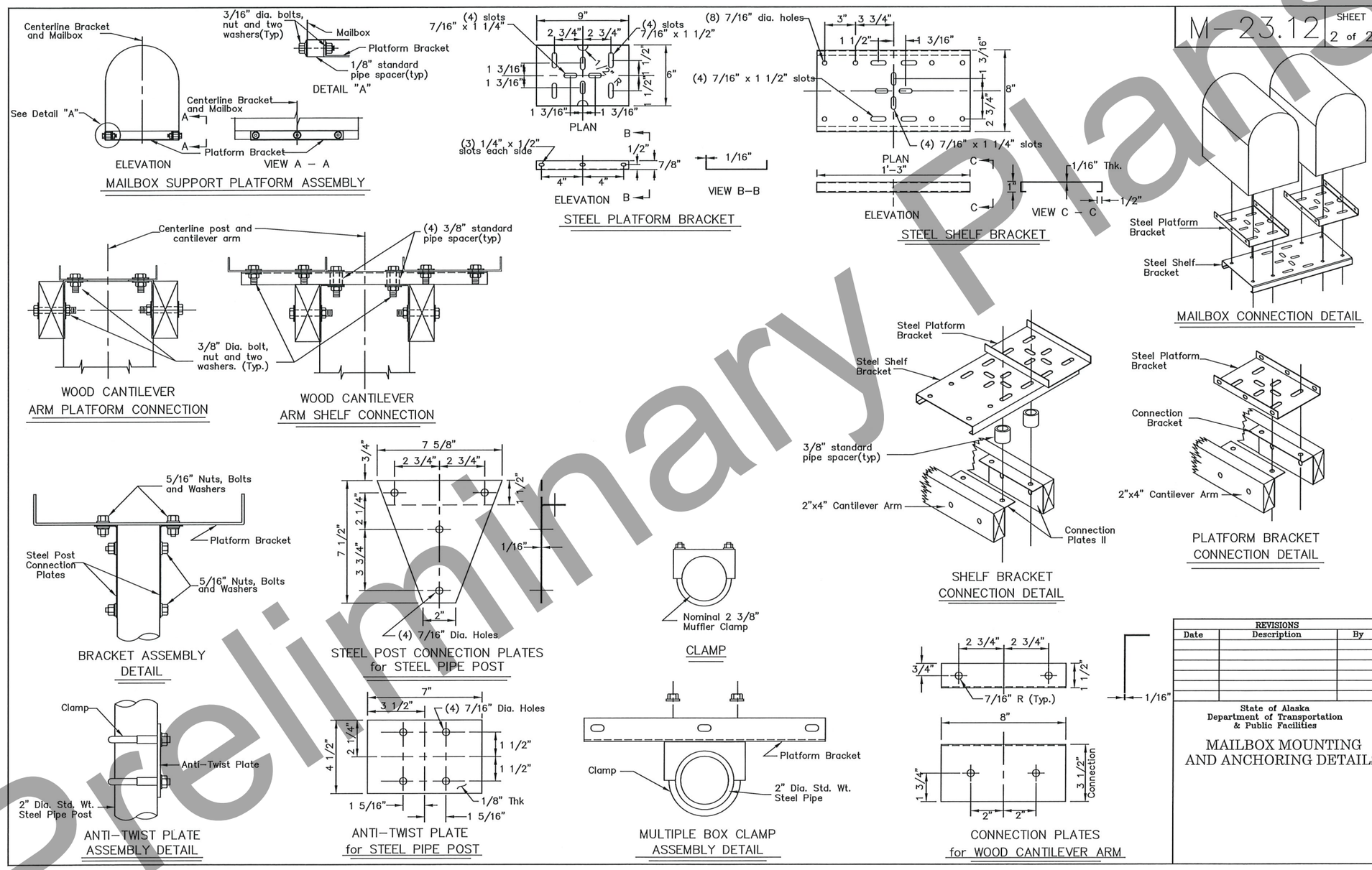

REVISIONS		
Date	Description	By

State of Alaska
Department of Transportation
& Public Facilities

MAILBOX MOUNTING AND ANCHORING DETAILS

M-23.12

STANDARD PLAN M-23.12
SHEET 2 OF 2

Preliminary Plans

PLANS DEVELOPED BY: STATE OF ALASKA DEPARTMENT OF TRANSPORTATION & PUBLIC FACILITIES, NORTHERN REGION, 2301 PEGER ROAD, FAIRBANKS, AK 99709 (907)451-2200
R:\Projects\Drafting Special Projects\Working folder\HWY\Little Goldstream\m2312_NR-m2312 2of2 Wed, Jul/01/20 01:13pm

STATE	PROJECT DESIGNATION	YEAR	SHEET NO.	TOTAL SHEETS
ALASKA	PENDING/NFHWY00476	2020	V27	V32

S-00.11

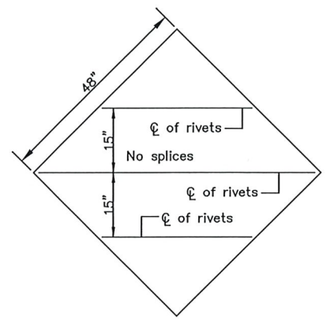

TUBE SIGN POST SPACING								
Sign Width (feet)	No. of Posts	Distance Between Posts	Sign Overhang	Post Type				Notes
				P.S.T.	Wood	Steel Tube	W-Shape	
0.5 to 4.0	1	–	0.5W	X	X	X		See Note 2.
4.5 to 10.0	2	0.6W	0.2W	X	X	X		See Note 3.
10.5 to 11.0	2	6	Varies	X	X	X		See Note 3.
11.5 to 13.0	2	8	Varies				X	
13.5 to 20.0	2	0.6W	0.2W				X	
20.5 to 22.5	3	8	Varies				X	
23.0 to 29.5	3	0.35W	0.15W				X	
30.0 to 31.5	4	8	Varies				X	
32.0 to 40.0	4	0.25W	0.125W				X	

SIGN POST SPACING NOTES:

1. Install sign support in accordance with the table above, unless otherwise required by plans or specifications.
2. Exceptions:
   a. Use one post for all E5-1 gore signs, regardless of width.
   b. Use one 2.5" P.S.T. for all STOP signs, with or without street name signs.
3. Supports placed within 7' of each other must be acceptable for that use. See Standard Plan S-30 for the sizes of wood posts and P.S.T.s that may be used within 7'. See Manufacturer's documentation for breakaway couplings and tubes that may be used within 7'.
4. See Standard Plan S-31 for frangible couplings, hinges, and foundations for tube and W-shape sign supports.

GENERAL NOTES

1. See the standard specifications for the aluminum alloys that you may use for sign sheeting and wind framing members.
2. Fabricate all signs from 0.125" thick aluminum sheeting.
3. Sign fabricators may use alternates to the zee shaped framing member with approval of the engineer, if the frame manufacturer certifies their design equals or exceeds the strength of the zee shaped design.
4. Install one piece wind framing members on all signs up to 23.5' wide. Use one splice in each wind frame on all signs wider than 23.5'. Locate splices at least 18" from all posts and panel edges. Stagger splices in adjacent framing members at least 8.0' apart.
5. Attach wind framing members with rivets or with an engineer approved, double sided, high strength, adhesive tape. Clean and handle sheeting and framing members and apply tape in accordance with the tape manufacturer's written instructions. Install two rivets in both ends of each framing member.
6. Use 3/16" diameter rivets conforming to aluminum alloy 6061-T6 for cold driven rivets, or aluminum alloy 6061-T43 for hot driven rivets.
7. Sign fabricators may use sign panels extruded with integral framing with approval of the engineer, if the manufacturer certifies their design equals or exceeds the strength of the 0.125" thick panel with framing attached to it.
8. Frame all signs taller than 8.0' with five wind framing members located (H-0.15)/4 spaces. If needed, make a horizontal splice at the middle wind frame.
9. Do not use round pipes for sign supports.

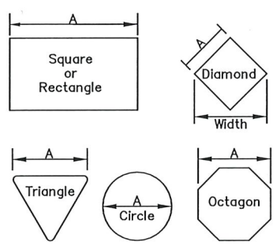

Maximum size unframed signs using 0.125" thick aluminum sheeting.	
Sign Shape	A
Squares, Shields, and Route Markers	48"
Rectangles	48"
Diamonds	48"
Triangles	48"
Rounds and Octagons	48"

Install wind framing on all signs that exceed the dimensions listed.

LIGHT SIGNS

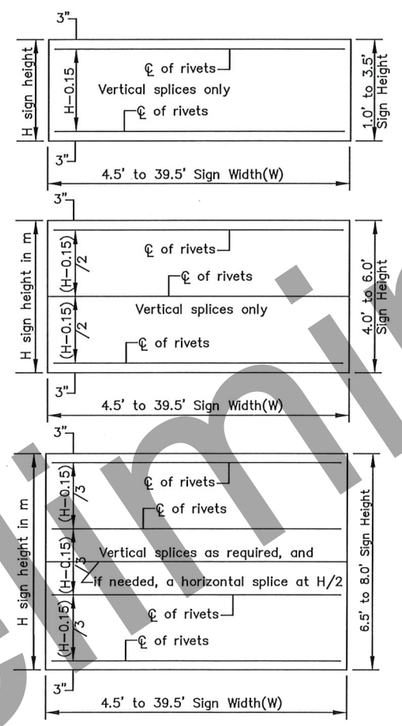

WIND FRAMING LOCATIONS

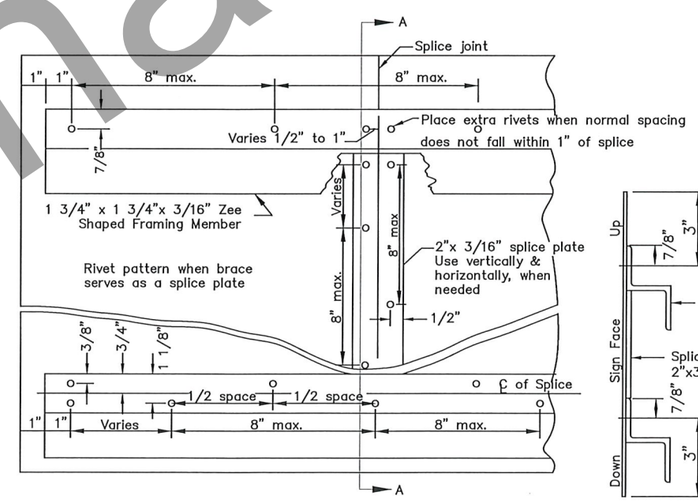

RIVET DETAIL FOR ZEE SHAPED WIND FRAMING & SPLICE PLATE

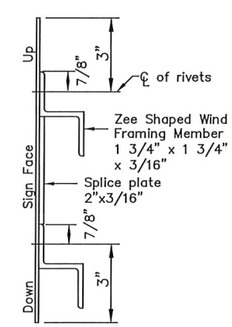

SECTION A-A

REVISIONS		
Date	Description	By
4/28/10	Delete pipe, rev notes	KJS

Sheet 1 of 1

State of Alaska
Department of Transportation
& Public Facilities

SIGN FRAMING AND POST SPACING

S-00.11

STANDARD PLAN S-00.11

Preliminary Plans

PLANS DEVELOPED BY: STATE OF ALASKA DEPARTMENT OF TRANSPORTATION & PUBLIC FACILITIES, NORTHERN REGION, 2301 PEGER ROAD, FAIRBANKS, AK 99709 (907)451-2200
R:\Projects\Drafting Special Projects\Working folder\HWY\Little Goldstream\00476_V1-S0011 Wed, Jul/01/20 01:13pm

STATE	PROJECT DESIGNATION	YEAR	SHEET NO.	TOTAL SHEETS
ALASKA	PENDING/NFHWY00476	2020	V28	V32

S-01.01

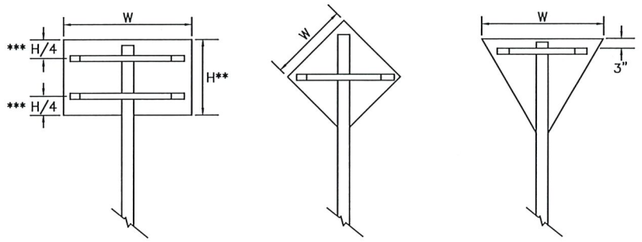

*** Use one brace when H ≤ 18"
Use two braces when 18"< H < 48"
Use three braces when H ≥ 48"

** Position of brace may be varied to match Predrilled mounting holes in panel

SIGN BRACING PLACEMENT

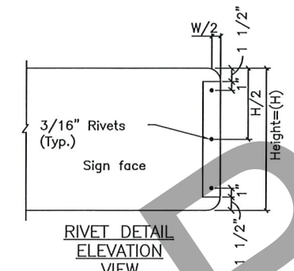

RIVET DETAIL
ELEVATION
VIEW

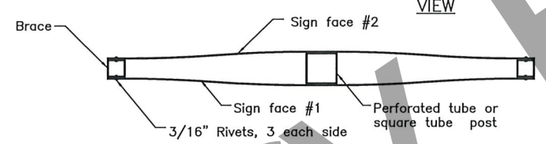

PLAN VIEW

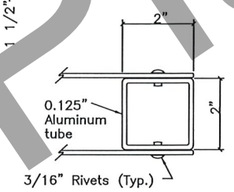

END BRACE DETAIL

SMALL STREET NAME SIGN (D3-1, D3-1A, D3-1D) BRACING DETAILS

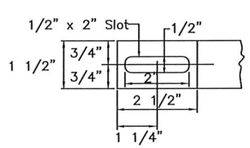

DETAIL OF BRACE SLOT
Elevation view

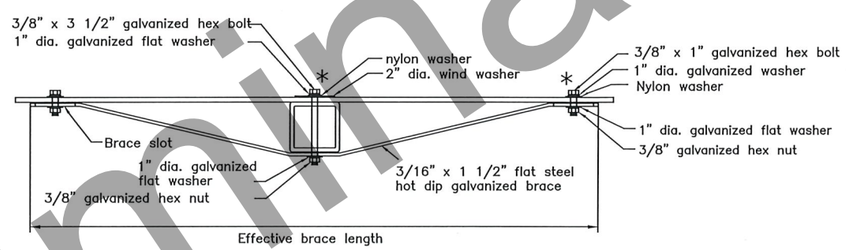

TUBE POST SIGN BRACING
Plan view

* Adjust location of bracing so that bolts and washers will miss the sign legend

Sign Width(W)	Effective Brace Length		
	Warning	Yield	Other
30"	36"	24"	24"
36"	42"	30"	30"
42"	48"	–	36"
48"	Two posts	36"	42"

< 30" No bracing required and use square tube

DRAWING NOT TO SCALE

REVISIONS		
Date	Description	By
1/16/17	Bolt size & type	LRG

State of Alaska DOT&PF

BRACING FOR SIGNS
MOUNTED ON SINGLE POST

S-01.01

STANDARD PLAN S-01.01

Preliminary Plans

PLANS DEVELOPED BY: STATE OF ALASKA DEPARTMENT OF TRANSPORTATION & PUBLIC FACILITIES, NORTHERN REGION, 2301 PEGER ROAD, FAIRBANKS, AK 99709 (907)451-2200
R:\Projects\Drafting Special Projects\Working folder\HWY\Little Goldstream\00476_V-S0101 Wed, Jul/01/20 01:13pm

STATE	PROJECT DESIGNATION	YEAR	SHEET NO.	TOTAL SHEETS
ALASKA	PENDING/NFHWY00476	2020	V29	V32

S-05.01

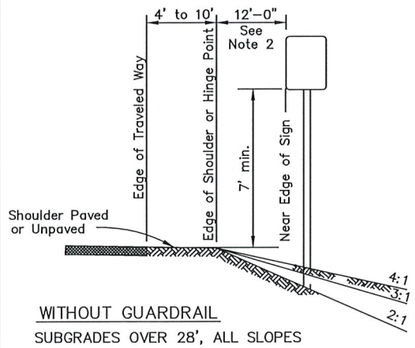

WITHOUT GUARDRAIL
SUBGRADES OVER 28', ALL SLOPES

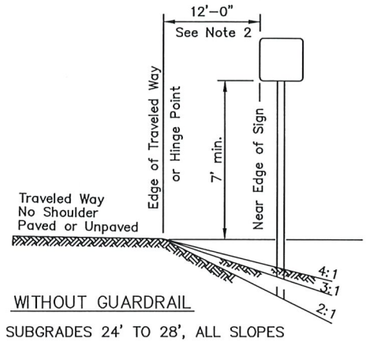

WITHOUT GUARDRAIL
SUBGRADES 24' TO 28', ALL SLOPES

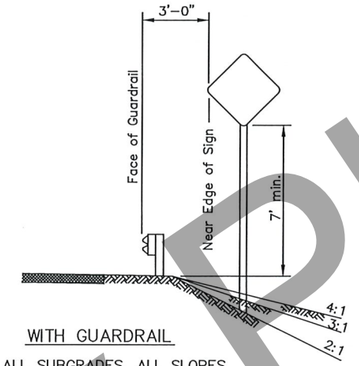

WITH GUARDRAIL
ALL SUBGRADES, ALL SLOPES

GENERAL NOTES

1. Unless shown otherwise on the plans, the standard sign offset is 12'. The minimum is 6'.
2. If signs extend over sidewalks, the minimum vertical clearance is 7'-0".
3. Add 6" to mounting height on unpaved roads.
4. If signs extend over bike paths, the minimum vertical clearance is 8' 0".
5. When signs are placed 30' or more from the edge of traveled way, mount them with the bottom of the sign at least 5' above the road surface at the near edge of the road.
6. When multiple hinged sign supports are used, mount hinges at least 7' above the ground.

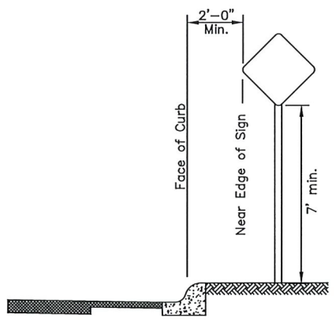

CURB WITHOUT SIDEWALK

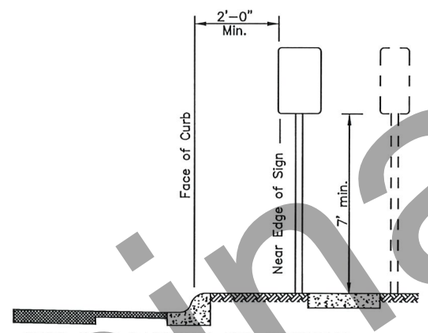

CURB WITH PARKWAY AND SIDEWALK
(If R/W width permits, signs should be placed behind sidewalk.)

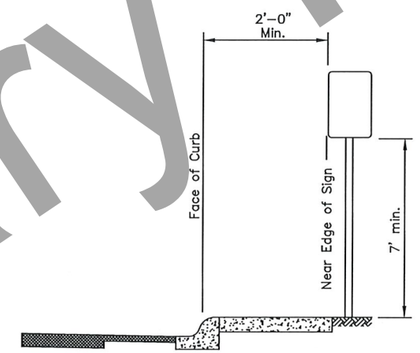

CURB WITH SIDEWALK WITHOUT PARKWAY

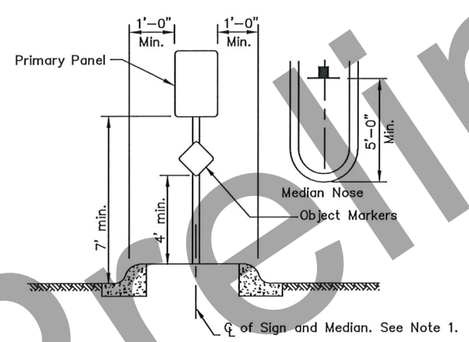

RAISED MEDIANS
Minimum 4' Width for Signing

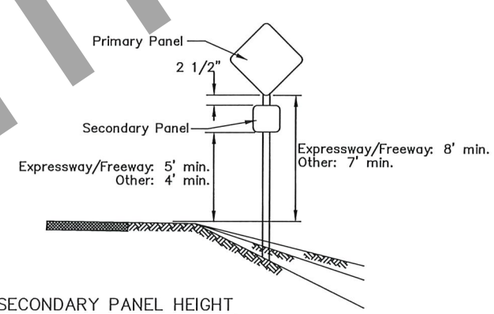

SECONDARY PANEL HEIGHT
ALL TWO PANEL MOUNTING

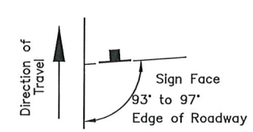

SIGN POSITIONING

REVISIONS		
Date	Description	By
4/3/01	Revised Sign Heights	KJS

Sheet 1 of 1

State of Alaska
Department of Transportation
& Public Facilities

POST MOUNTED SIGN
OFFSET AND HEIGHT

S-05.01

STANDARD PLAN S-05.01

Preliminary Plans

PLANS DEVELOPED BY: STATE OF ALASKA DEPARTMENT OF TRANSPORTATION & PUBLIC FACILITIES, NORTHERN REGION, 2301 PEGER ROAD, FAIRBANKS, AK 99709 (907)451-2200
R:\Projects\Drafting Special Projects\Working folder\HWY\Little Goldstream\00476_V1-S0501 Wed, Jul/01/20 01:13pm

STATE	PROJECT DESIGNATION	YEAR	SHEET NO.	TOTAL SHEETS
ALASKA	PENDING/NFHWY00476	2020	V30	V32

S-30.04

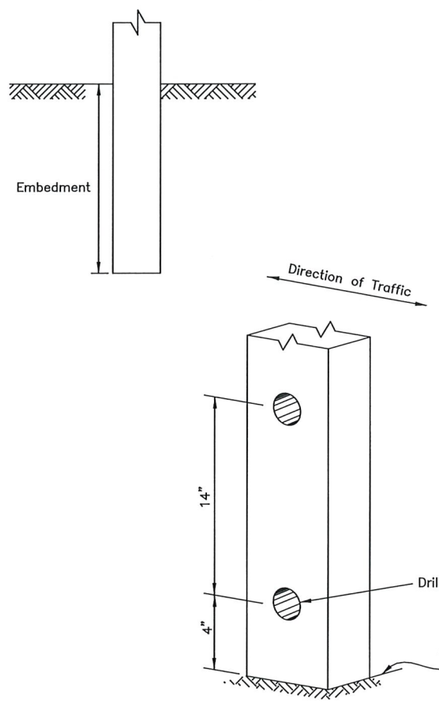

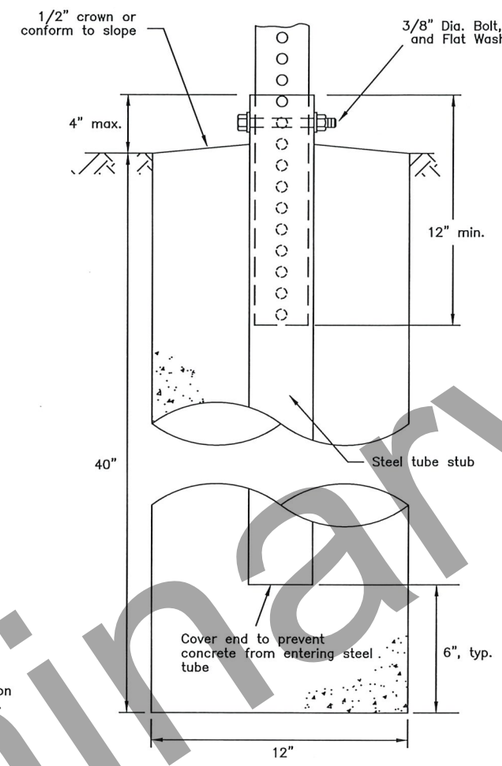

SLEEVE TYPE
CONCRETE FOUNDATION

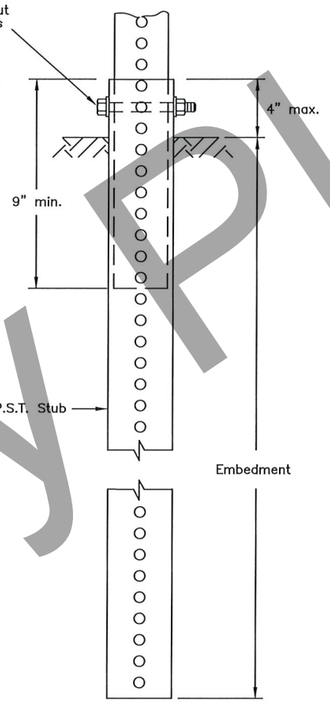

SLEEVE TYPE *
SOIL EMBEDMENT

WOOD SIGN POSTS			
SIZE	HOLE DIA.	EMBEDMENT*	NO. OF POSTS WITHIN 7 Ft. PATH
4"x4"	NONE	36"	2
4"x6"	1 1/2"	36"	2
6"x6"	1 1/2"	40"	1
6"x8"	3"	48"	1

* Embedment depth applies in both strong and weak soil.

WOOD POSTS

PERFORATED STEEL TUBES (P.S.T.)		
POST SIZE	Embedment Depth	No. of P.S.T.s permitted within 7 ft path
1 1/2" x 1 1/2"	3'-0"	2
1 3/4" x 1 3/4"	3'-0"	2
2" x 2"	3'-6"	2
2 1/4" x 2 1/4"	4'-0"	1
2 1/2" x 2 1/2"	4'-6"	1

* Use 3"x3"x3/16" Stub for 2 1/2"x2 1/2" PST Applications.

PERFORATED STEEL TUBE (PST) POSTS

GENERAL NOTES:

1. Refer to Std Plan S-00 for sign framing details.
2. See plans for type of post, size and embedment type.
3. To maintain crashworthiness, install no more than the number of P.S.T.s or wood posts specified in the tables within 7' of each other.
4. Do not install wood posts larger than 6"x8".
5. Do not use the supports on this drawing for multiple support signs if supports are separated by more than 7 feet.
6. Treat all field cuts and field drilled holes in wood posts in accordance with Section 730-2.04 of the Standard Specifications.

REVISIONS		
Date	Description	By
4/2/01	Revised PST table Added Note 3	KJS
2/12/02	Revised wood posts	KJS
1/16/17	Rev. note 1, et. al.	LRG

State of Alaska DOT&PF

LIGHT SIGN STRUCTURE
POST EMBEDMENT

S-30.04

STANDARD PLAN S-30.04

Preliminary Plans

PLANS DEVELOPED BY: STATE OF ALASKA DEPARTMENT OF TRANSPORTATION & PUBLIC FACILITIES, NORTHERN REGION, 2301 PEGER ROAD, FAIRBANKS, AK 99709 (907)451-2200
R:\Projects\Drafting Special Projects\Working folder\HWY\Little Goldstream\s3004_NR-s3004 Wed, Jul/01/20 01:13pm

STATE	PROJECT DESIGNATION	YEAR	SHEET NO.	TOTAL SHEETS
ALASKA	PENDING/NFHWY00476	2020	V31	V32

S-32.00

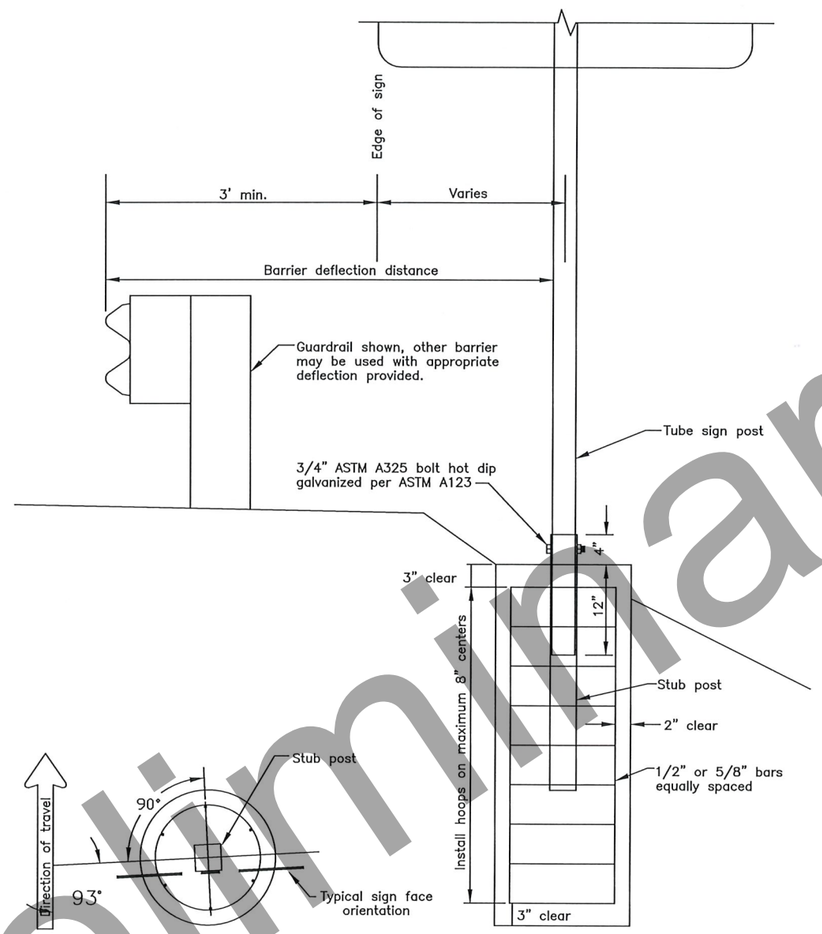

SIGN POST FOUNDATION
(Plan view)

SIGN POST FOUNDATION
See table for depth and diameter

GENERAL NOTES

1. This is a non-crashworthy sign support. It may only be used at locations shielded by a guardrail, barrier, or wall. It may not be used if the sign post is within 20' of the rail and is closer than 75' from the guardrail end post (measured along the rail). For this case use a breakaway sign support. See Standard Plan G-20.
2. Furnish steel tube sign post and stub post that conform to ASTM A500, grade B, and meet ASTM A123 for hot dip galvanizing.
3. Install tubes and stub post with a 0.1875" wall thickness.
4. For Perforated Tubes use Standard Plan S-30.
5. Spiral reinforcing steel may be substited for hoops in concrete foundation. Spiral option shall consist of No. 3 plain spiral with 6" pitch with three flat turns at the top and one flat turn at the bottom.

POST SIZE & TYPE	FOUNDATION *			REINFORCEMENT					STUB POST	
	DIA.	MIN. DEPTH	C.Y. CONC.	VERTICAL BARS			HOOPS		SLEEVE	
				QTY.	SIZE	LGTH.	SIZE	DIA.	SIZE	LGTH.
2 1/2" TUBE	1'-0"	4'-6"	0.13	6	1/2"	4'-0"	1/2"	8"	3"	3'
3" TUBE	1'-6"	4'-0"	0.25	6	1/2"	3'-6"	1/2"	1'-2"	3 1/2"	3'
3 1/2" TUBE	1'-6"	4'-6"	0.27	6	1/2"	4'-0"	1/2"	1'-2"	4"	3'
4" TUBE	2'-6"	4'-0"	0.69	7	5/8"	3'-6"	1/2"	2'-2"	4 1/2"	3'
4 1/2" TUBE	2'-6"	4'-6"	0.78	7	5/8"	4'-0"	1/2"	2'-2"	5"	3'

* Foundation sized for use where there are no loose, high moisture, or fine grained soil.

REVISIONS		
Date	Description	By

Sheet 1 of 1

State of Alaska
Department of Transportation
& Public Facilities

SIGN POST BASE AND FOUNDATION BEHIND BARRIER

S-32.00

STANDARD PLAN S-32.00

Preliminary Plans

PLANS DEVELOPED BY: STATE OF ALASKA DEPARTMENT OF TRANSPORTATION & PUBLIC FACILITIES, NORTHERN REGION, 2301 PEGER ROAD, FAIRBANKS, AK 99709 (907)451-2200
R:\Projects\Drafting Special Projects\Working folder\HWY\Little Goldstream\00476_V1-S3200 Wed, Jul/01/20 01:13pm

STATE	PROJECT DESIGNATION	YEAR	SHEET NO.	TOTAL SHEETS
ALASKA	PENDING/NFHWY00476	2020	V32	V32

T-21.03 SHEET 1 of 1

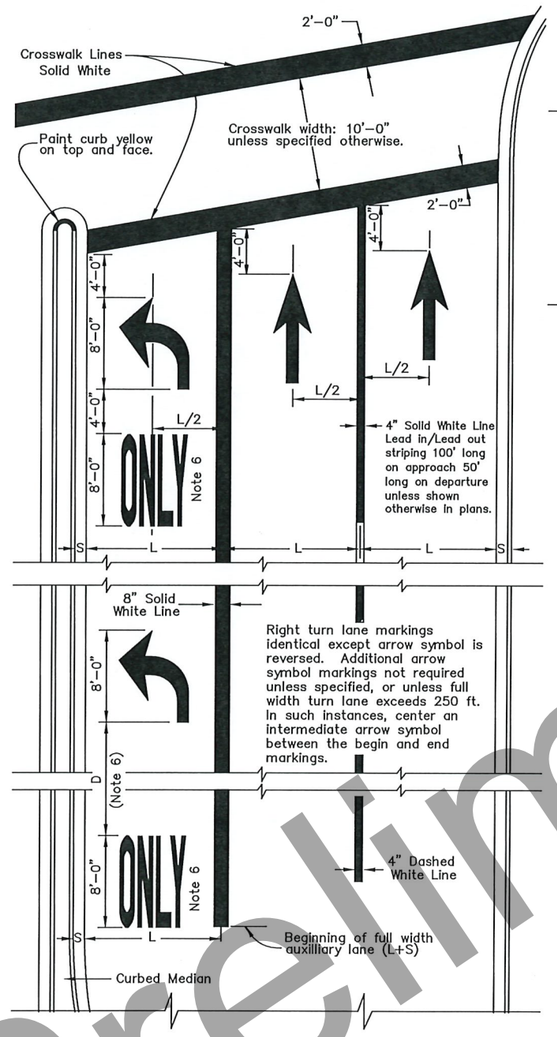

APPROACH TO INTERSECTION

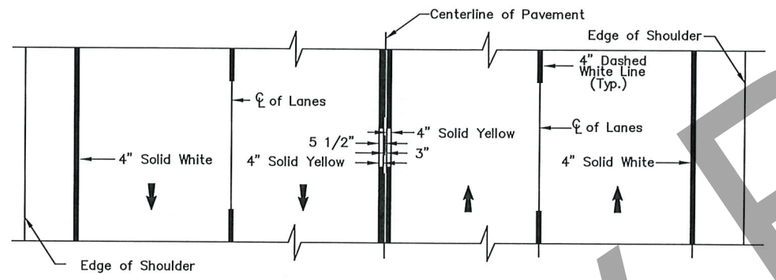

FOUR LANE TWO WAY

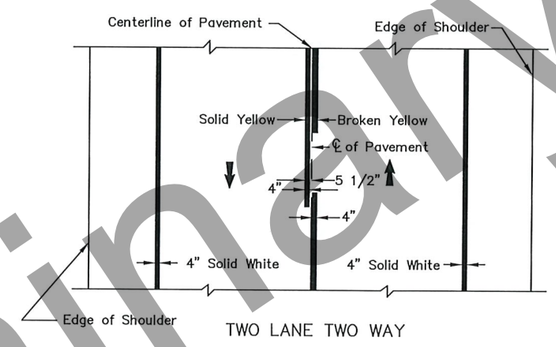

TWO LANE TWO WAY

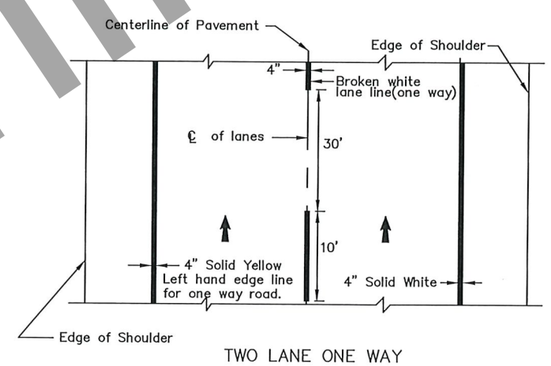

TWO LANE ONE WAY

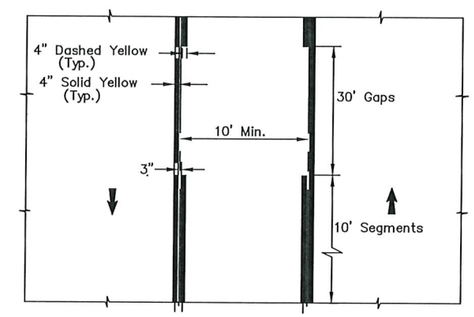

TWO-WAY LEFT TURN LANE

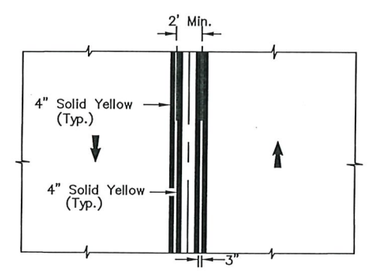

STRIPED MEDIAN

GENERAL NOTES:

1. All markings white unless indicated otherwise.
2. Lengths of stripe and gap for lane and center lines identical.
3. Lane lines for auxiliary lanes are unbroken solid lines.
4. "L" = driving lane width.
5. "S" = shy distance as shown on plans, otherwise 1 to 2 feet.
6. ONLY markings are required where through lanes change to turn lanes. In other cases, apply ONLY markings as indicated on plans.
7. See ALASKA TRAFFIC MANUAL for additional instruction on the use of TRAFFIC CONTROL DEVICES.
8. 6. Adjust distance D between ONLY and Turn Arrow based on SPEED vs. D table.

SPEED	D
25 or less	35'
30	45'
35	50'
40	60'
45	65'
50	75'
55 or more	80'

REVISIONS		
Date	Description	By
1/1/86	Arrow Dimension	Gdo
1/1/96	Intersect. Note	Gdo
4/28/10	Details, labels, notes	KJS

State of Alaska
Department of Transportation
& Public Facilities

PAVEMENT MARKING APPLICATIONS

T-21.03

STANDARD PLAN T-21.03

Preliminary Plans

PLANS DEVELOPED BY: STATE OF ALASKA DEPARTMENT OF TRANSPORTATION & PUBLIC FACILITIES, NORTHERN REGION, 2301 PEGER ROAD, FAIRBANKS, AK 99709 (907)451-2200
R:\Projects\Drafting Special Projects\Working folder\HWY\Little Goldstream\t2103_NR-t21.03 Wed, Jul/01/20 01:13pm